HIWIN®

SINGLE-AXIS ROBOT
KH Series

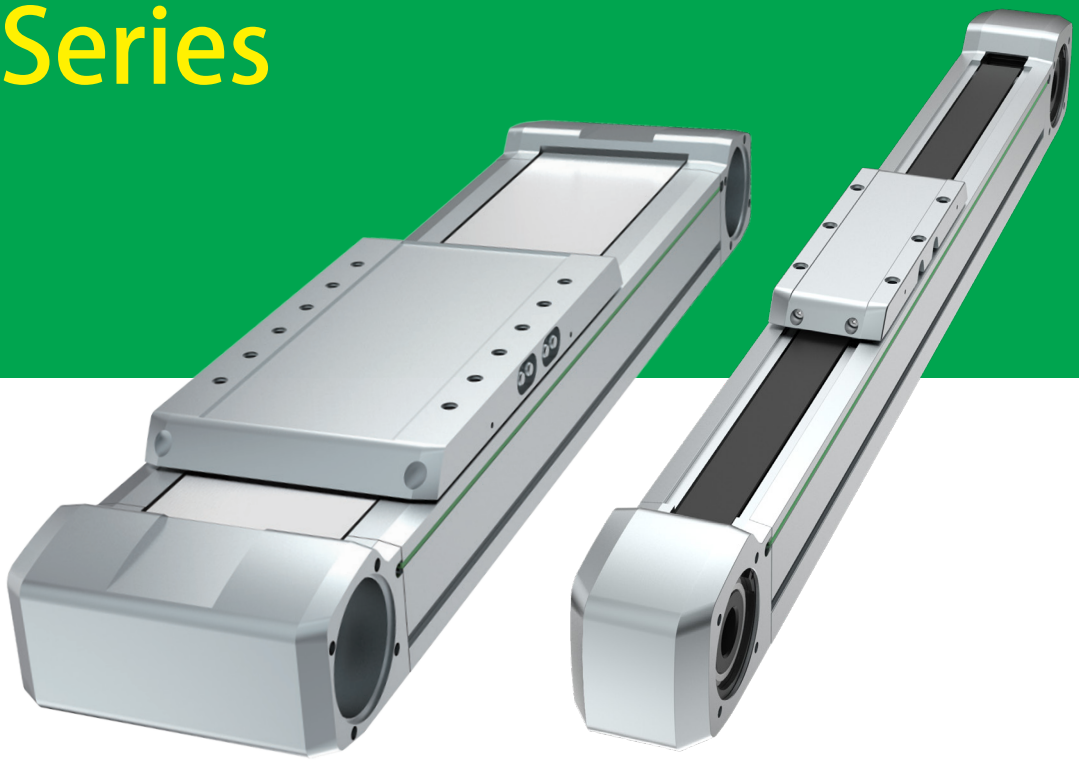

HIWIN Support

About HIWIN

From Precision to Speed, Modular Design Meets the Needs

Single-Axis Robot - KH Series

Single-Axis Robot - KH Series features high precision, high reliability, and wide range of modular combination, meeting the needs of various industries that requires efficient linear motion. It is widely used in automation, cutting, dispensing, inspection, handling, packaging, and printing, providing customers with customized solutions.

The modular design can be flexibly combined into two-axis, three-axis, or gantry-type positioning platform systems, achieving high-precision and high-speed motion control, meeting the diverse needs of modern industrial automation.

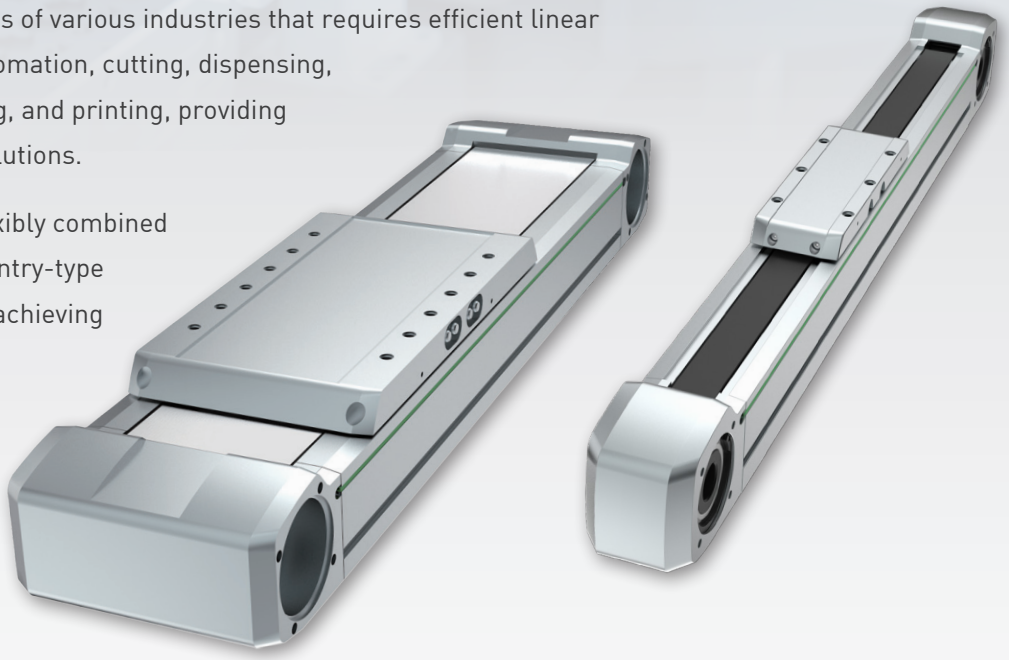

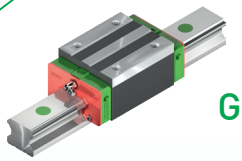

Linear Guideway

High-quality HIWIN Linear Guideway can transfer force and torque from the platform to the base.

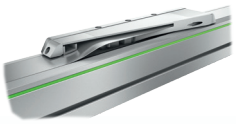

Covering Belt

Effectively provides protection against dust and foreign object intrusion.

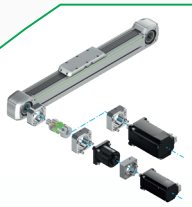

Flange Installation

The modular symmetric design allows motors and gearboxes to be installed on either side of the pulley bearing seat as required.

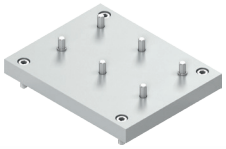

Connection Plate

The adapter plate for the Cartesian coordinate system offers a wide range of options, allowing users to easily assemble a multi-axis system from a single-axis robot and quickly obtain design solutions.



Timing Pulleys

The timing pulley, featuring high-performance tooth profiles and reinforced steel wires, ensures stable operation under high load and high-speed conditions.

Real-Time Service: Digital Selection Tool

2D/3D Files
Quick Download

HIWIN Support

Selection Tool: Stroke Length, Specifications, Motor / Gearbox Combinations

Input Operation Conditions



Motion Parameters



Calculation Results



Motor Selection



2D / 3D CAD File Download (Including Accessories)

Select Model



Confirm Accessories



3D Model Preview/Download



2D Model Preview/Download

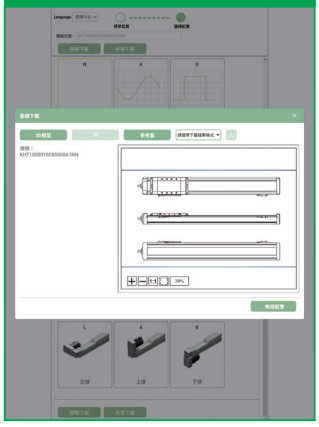

Steps for Use

Enter Basic Information

- Travel stroke
- Installation orientation
- Load mass
- Precision
- Other external loads

Enter Motion Parameters

- Speed
- Acceleration
- Motion cycle

Optional Configuration

- Limit switch
- Gearbox
- Position measurement system
- Cable drag chain
- Flange mounting direction

Download File

- Design datasheet
- 2D CAD file
- 3D CAD file

Diverse Range of Modular Combination

Cartesian Coordinate System - Connection Adapter Plate

The connection adapter plate for the Cartesian coordinate system offers a wide range of options, allowing users to easily assemble a multi-axis system from a single-axis robot and quickly obtain design solutions. Each adapter plate has a datum support or secured with a locating ring to ensure overall stability after installation, while also enhancing the convenience of assembly.

The Cartesian coordinate system offers three basic types of adapter plates to choose from:

CCN: The bottom axis and top axis platform are interconnected, with both axes perpendicular to each other.

CPN: The bottom axis platform and top axis base are interconnected, with both axes perpendicular to each other, and the platforms facing the same direction.

CPR: The bottom axis platform and top axis base are interconnected, with both axes perpendicular to each other, and the platforms facing a 90° perpendicular direction.

CCN Adapter Plate

The CCN adapter plate is suitable for a Cartesian coordinate system with a cross configuration. By connecting the platforms, it combines two single-axis adapter plates (Bottom Axis: KHM / KHT, Top Axis: KHM / KHT / KK).

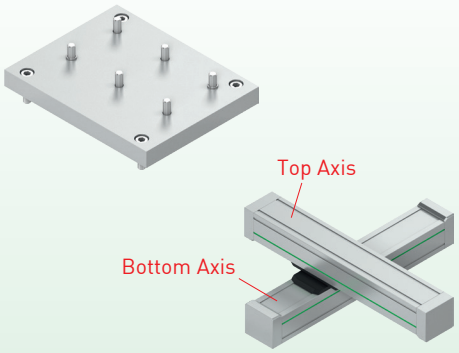

CPN Adapter Plate

The CPN adapter plate is suitable for a Cartesian coordinate system with a cross configuration. By connecting the platform and the base, it combines two single-axis adapter plates (Bottom Axis: KHM / KHT, Top Axis: KHM / KHT / KK).

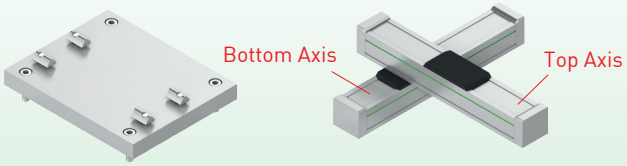

The CPN adapter plate is suitable for a gantry-style Cartesian coordinate system. By connecting the platform and the base, it combines two single-axis KHM (Bottom Axis) and one single-axis KHM / KHT (Top Axis) adapter plates.

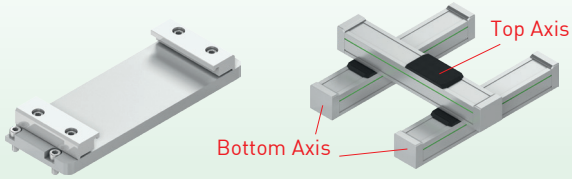

CPR Adapter plate

The CPR adapter plate (rotated 90°) is suitable for a Cartesian coordinate system with a cross configuration. By connecting the platform and the base, it combines two single-axis adapter plates (Bottom axis: KHT, Top axis: KHM / KHT).

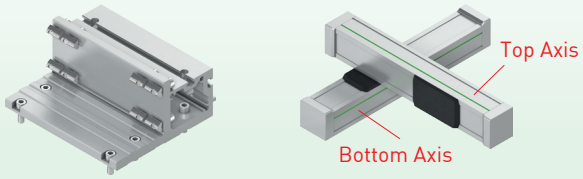

The CPR adapter plate is suitable for a gantry-style Cartesian coordinate system. By connecting the platform and the base, it combines two single-axis KHM and one single-axis KHM / KHT adapter plates.

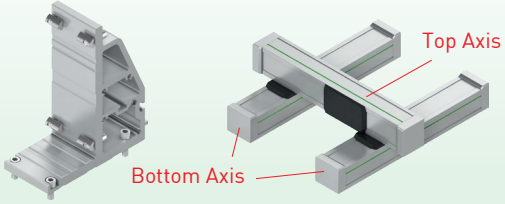

Combination Overview															
X-axis \ Y-axis		KHM				KHT				KK					
		040	060	080	120	100	150	200	250	30	40	50	60	86	100
KHM	040	●* ■*				●* ■*				●▲	●▲				
	060	●*	●* ■*			●*	●* ■*				●▲	●▲			
	080		●*	●* ■*			●*	●* ■*				●▲	●▲		
	120			●*	●*			●*	●* ■*						
KHT	100	●■▲				●■▲						●▲	●▲		
	150	●■▲	●■▲			●■▲	●■▲						●▲	●▲	
	200		●■▲	●■▲			●■▲	●■▲						●▲	●▲
	250			●■▲	●■▲			●■▲	●■▲						

● CPN ■ CPR ▲ CCN

* For the X-axis, two KHM single-axis robots are required.

Note: Depending on the configuration of the selected single-axis robots, there may be instances where additional accessories collide or fastening holes are covered. This situation must be verified individually.

KH Series - Specifications List

Features of KHM Single-Axis Robot

- Lightweight Structure and High Rigidity: The aluminum base is designed with a high structural rigidity and the use of heavy-load linear guideways achieve both stability and lightweight characteristics.
- Flexible Stroke Adjustment: Customizable stroke in mm units to adapt to a variety of application needs.

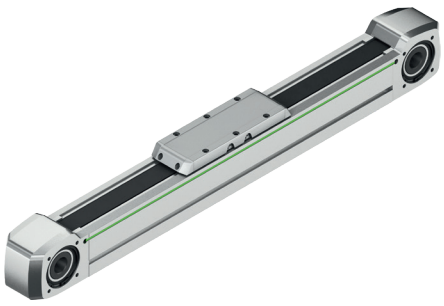

Features of KHT high moment rigidity Single-Axis Robot

- Dual-Track Design: Enhanced Anti-Torque Rigidity: Capable of handling high torque loads, ensuring precise operation.
- Low Profile Design: The base features a rectangular cross-section, suitable for situations with limited height clearance.

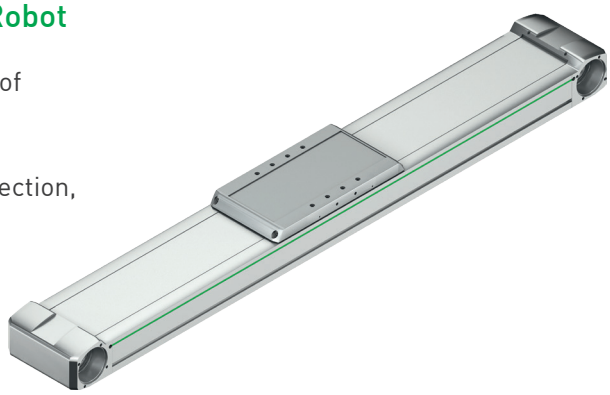

Product Model of KHM Single-Axis Robot

KHM 060 B 155 N 0755 S 000 A N N R BR07 G0605

KHM Series

Size (profile width)
040：40 mm
060：60 mm
080：80 mm
120：120 mm

Drive type
B：Toothed belt drive

Feed rate (lead)
[mm/rev]

Cover strip
C：With steel cover strip
N：Without cover strip

Stroke length
[mm]

Carriage length
S ： Short
M： Medium
L ： Long

Clearance between
two carriages [mm]
000：Single carriage

Limit switch [1]
N： Without limit switch
A： 2 x normally closed, 100 mm cable, connector
B： 2 x normally open, 100 mm cable, connector
C： 2 x normally closed, 4m open cable end
D： 2 x normally open, 5m open cable end

Toothed belt
N：Standard belt

Position measuring system option [2]
N： Without position measuring system
A： HIWIN PM, analog signal, 1 V_{PP} sin/cos
D： HIWIN PM, digital signal, TTL 5 V

Drive interface [3]
N：Without
L：Left
R：Right

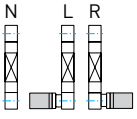

Flange type [4]

Gearbox [5]

Note:
1. Further reference switches can be provided upon request.
2. When selecting the position measuring system, the positioning repeatability is ±0.005 mm.
   For more details, please contact HIWIN.
3. If no flange installation direction is selected, the specification code ends here.
4. For all flange types, please consult HIWIN.If no gearbox is selected, the specification code ends here.
5. For suitable gearbox, please contact HIWIN.

KHM040B Dimensions

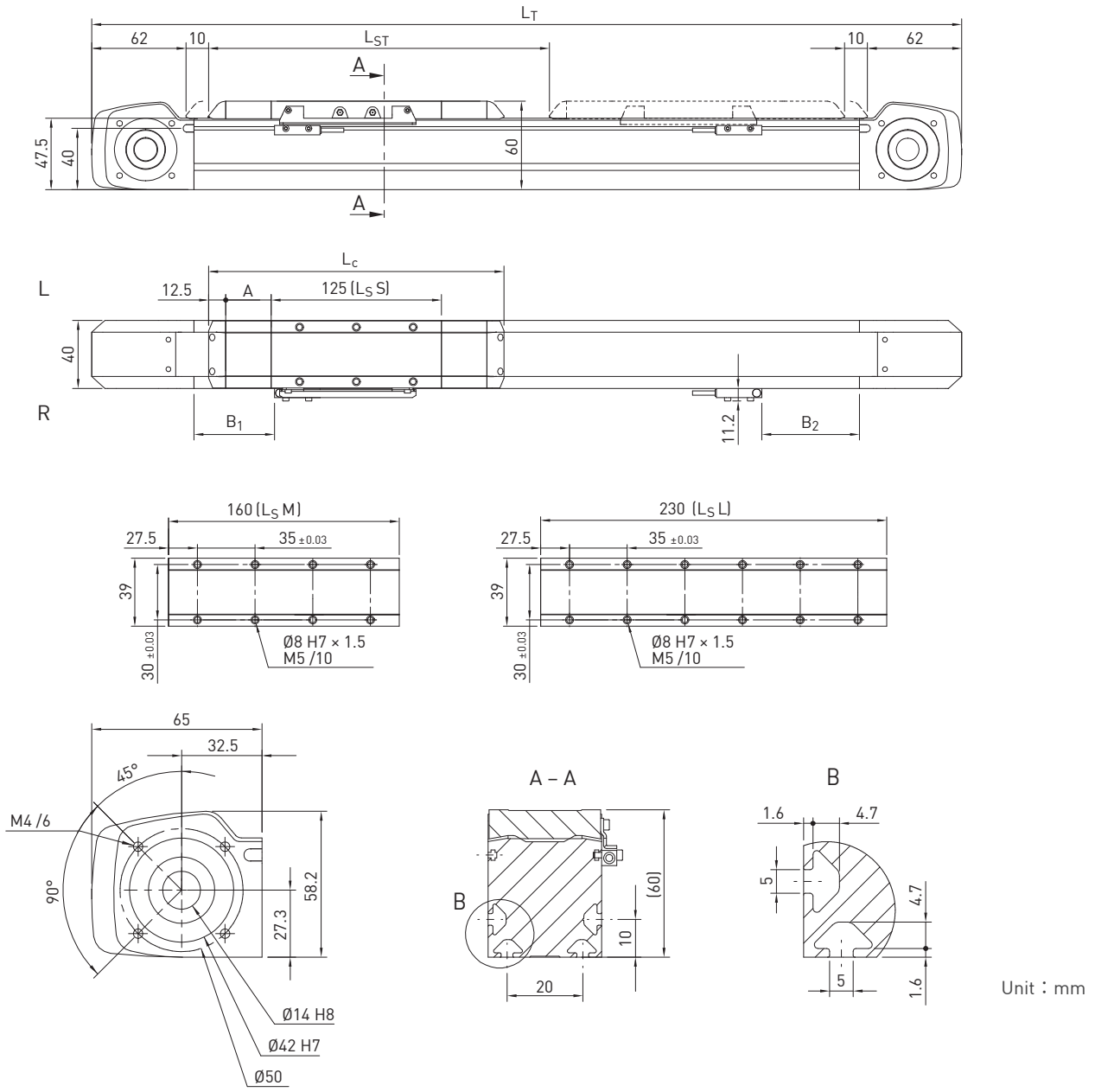

Unit：mm

Item \ Type of carriage	Without cover			With cover		
Carriage length Ls	S	M	L	S	M	L
Carriage length Lc (mm)	150	185	255	230	265	335
Cover strip deflection A (mm)	—	—	—	40	40	40
Limit switch position B_1 (mm)	24	24	24	64	64	64
Limit switch position B_2 (mm)	9	44	114	49	84	154
Max. stroke length L_{ST} (mm)	1,830	1,800	1,730	1,750	1,720	1,650
Total length L_T (mm)	$L_T = L_{ST} + 294$	$L_T = L_{ST} + 329$	$L_T = L_{ST} + 399$	$L_T = L_{ST} + 399$	$L_T = L_{ST} + 409$	$L_T = L_{ST} + 479$
Rated load (kg)	10	10	10	10	10	10
Max. speed (m/s)	5	5	5	5	5	5
Repeatability (mm)	±0.04	±0.04	±0.04	±0.04	±0.04	±0.04
Repeatability when selecting the optional position measuring system (mm)	±0.005	±0.005	±0.005	±0.005	±0.005	±0.005

KHM060B Dimensions

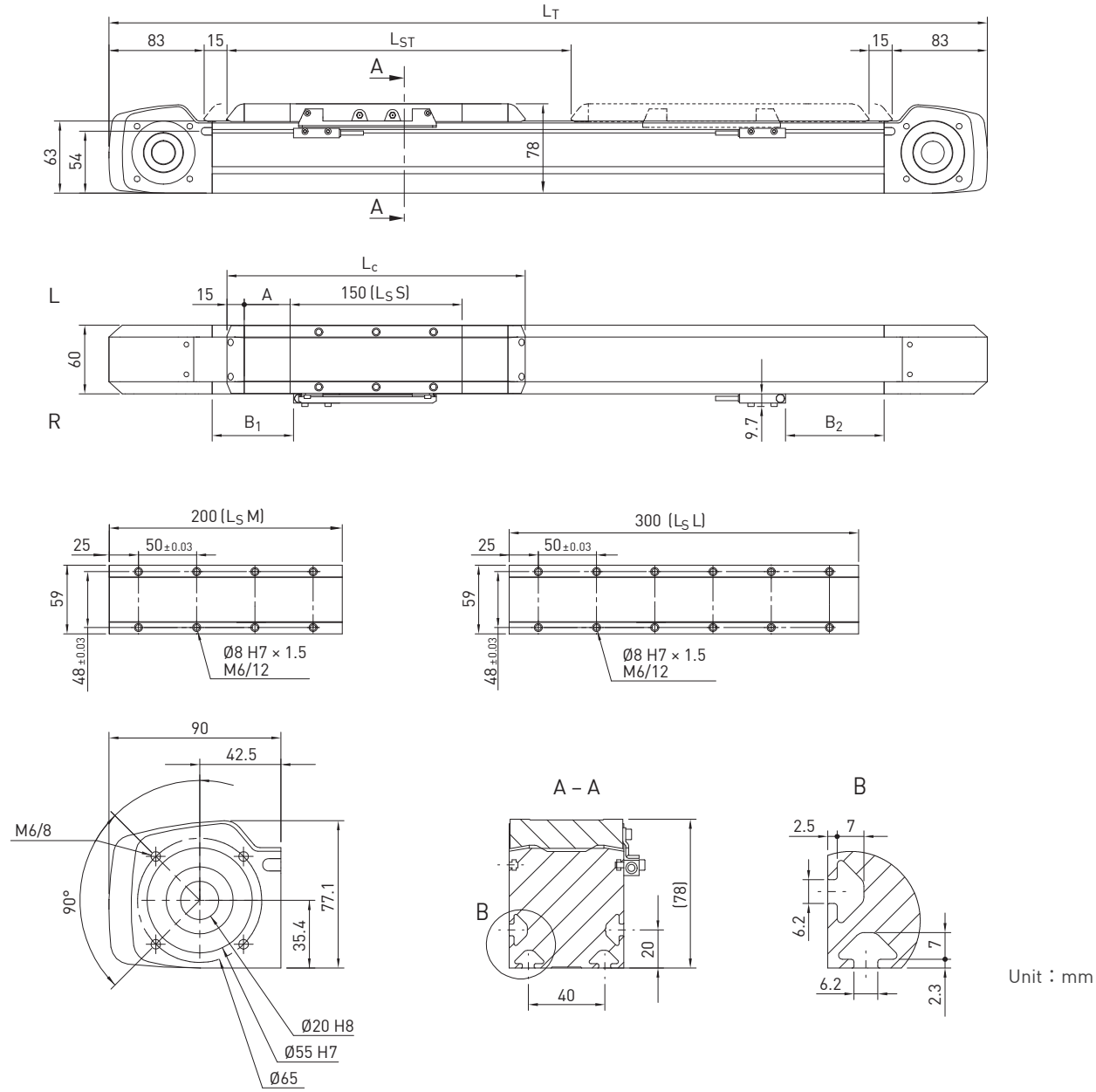

Unit：mm

Item \ Type of carriage	Without cover			With cover		
Carriage length Ls	S	M	L	S	M	L
Carriage length Lc (mm)	180	230	330	260	310	410
Cover strip deflection A (mm)	—	—	—	40	40	40
Limit switch position B_1 (mm)	25	25	25	65	65	65
Limit switch position B_2 (mm)	40	90	190	80	130	230
Max. stroke length L_{ST} (mm)	3,704	3,654	3,554	3,624	3,574	3,474
Total length L_T (mm)	$L_T = L_{ST} + 376$	$L_T = L_{ST} + 426$	$L_T = L_{ST} + 526$	$L_T = L_{ST} + 456$	$L_T = L_{ST} + 506$	$L_T = L_{ST} + 606$
Rated load (kg)	25	25	25	25	25	25
Max. speed (m/s)	5	5	5	5	5	5
Repeatability (mm)	±0.04	±0.04	±0.04	±0.04	±0.04	±0.04
Repeatability when selecting the optional position measuring system (mm)	±0.005	±0.005	±0.005	±0.005	±0.005	±0.005

KHM080B Dimensions

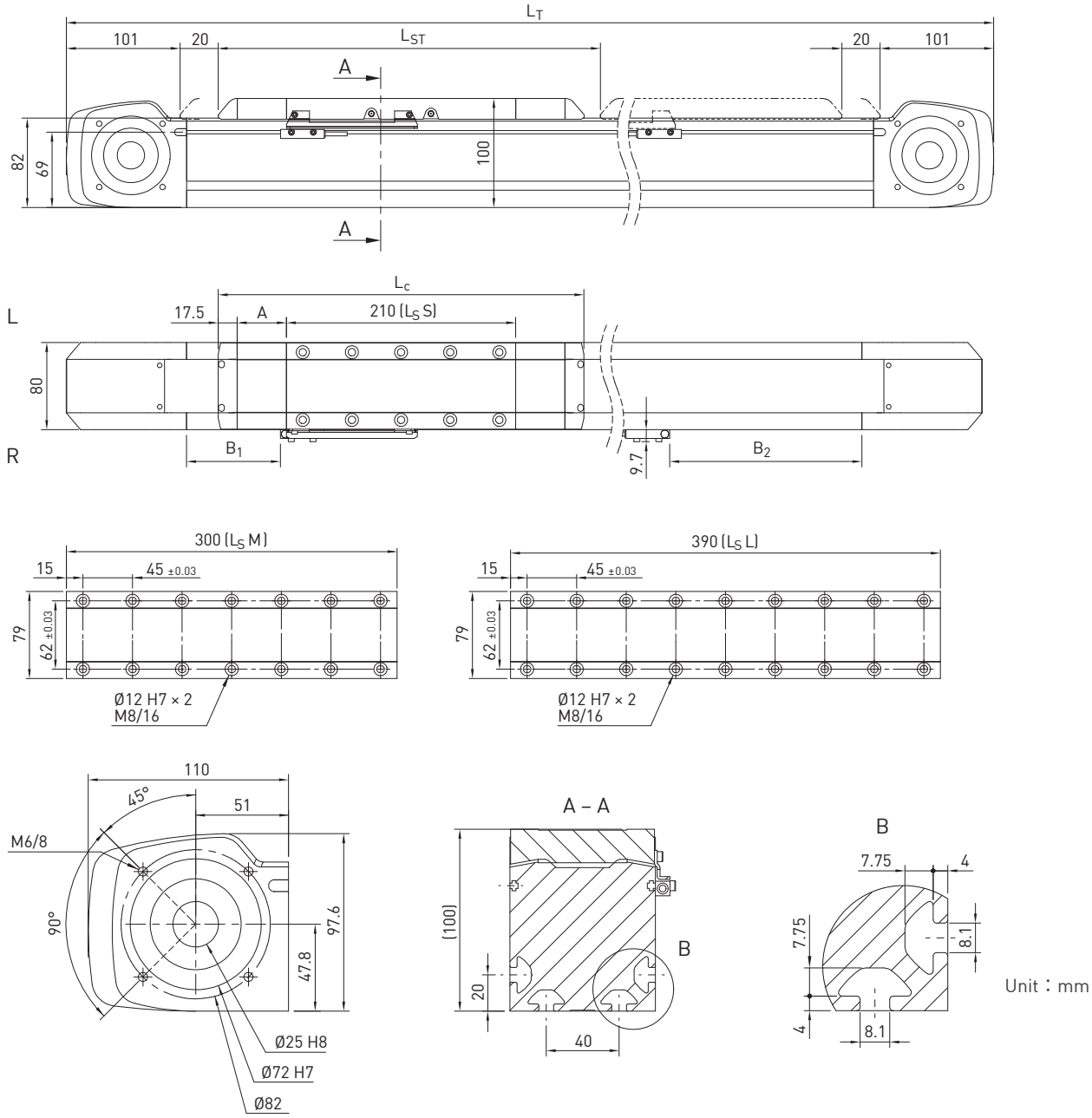

Unit：mm

Item \ Type of carriage	Without cover			With cover		
Carriage length Ls	S	M	L	S	M	L
Carriage length Lc (mm)	245	335	425	335	425	515
Cover strip deflection A (mm)	—	—	—	45	45	45
Limit switch position B_1 (mm)	23	23	23	68	68	68
Limit switch position B_2 (mm)	113	203	293	158	248	338
Max. stroke length L_{ST} (mm)	3,633	3,543	3,453	3,543	3,453	3,363
Total length L_T (mm)	$L_T = L_{ST} + 487$	$L_T = L_{ST} + 577$	$L_T = L_{ST} + 667$	$L_T = L_{ST} + 577$	$L_T = L_{ST} + 667$	$L_T = L_{ST} + 757$
Rated load (kg)	60	60	60	60	60	60
Max. speed (m/s)	5	5	5	5	5	5
Repeatability (mm)	±0.04	±0.04	±0.04	±0.04	±0.04	±0.04
Repeatability when selecting the optional position measuring system (mm)	±0.005	±0.005	±0.005	±0.005	±0.005	±0.005

KHM120B Dimensions

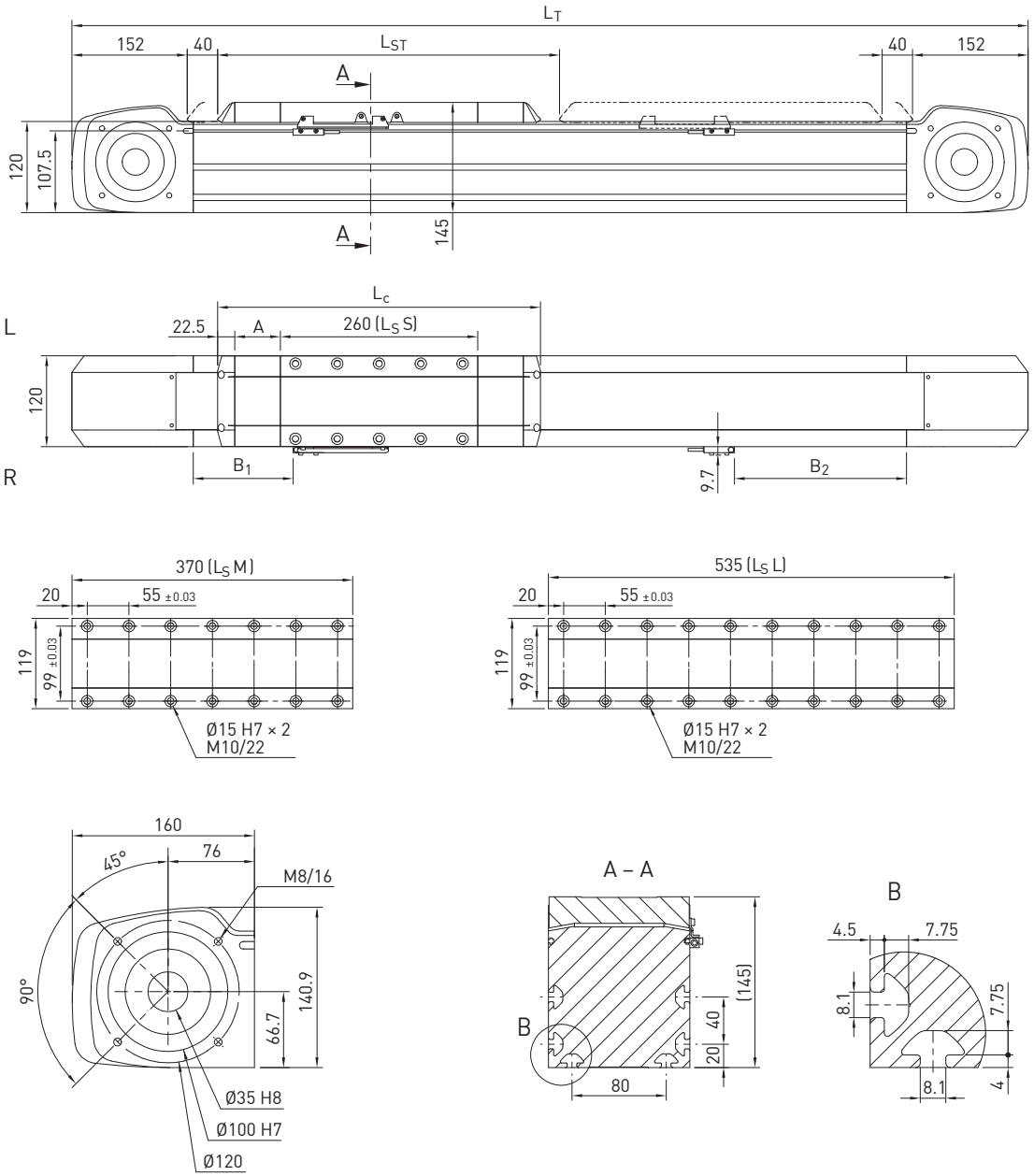

Unit：mm

Item \ Type of carriage	Without cover			With cover		
Carriage length Ls	S	M	L	S	M	L
Carriage length Lc (mm)	305	415	580	425	535	700
Cover strip deflection A (mm)	—	—	—	60	60	60
Limit switch position B_1 (mm)	71.5	71.5	71.5	131.5	131.5	131.5
Limit switch position B_2 (mm)	166.5	276.5	441.5	226.5	336.5	501.5
Max. stroke length L_{ST} (mm)	3,531	3,421	3,256	3,411	3,301	3,136
Total length L_T (mm)	$L_T = L_{ST} + 689$	$L_T = L_{ST} + 799$	$L_T = L_{ST} + 964$	$L_T = L_{ST} + 809$	$L_T = L_{ST} + 919$	$L_T = L_{ST} + 1,084$
Rated load (kg)	120	120	120	120	120	120
Max. speed (m/s)	5	5	5	5	5	5
Repeatability (mm)	±0.04	±0.04	±0.04	±0.04	±0.04	±0.04
Repeatability when selecting the optional position measuring system (mm)	±0.005	±0.005	±0.005	±0.005	±0.005	±0.005

KHT High Moment Rigidity Single-Axis Robot Product Model

KHT 150 B 155 C 1234 S A N N R BR07 G0605

KHT Series

Size (profile width)
100：100 mm
150：150 mm
200：200 mm
250：250 mm

Drive type
B：Toothed belt drive

Feed rate (lead)
[mm/rev]

Cover strip
C：With steel cover strip
N：Without cover strip

Stroke length
[mm]

Carriage length
S ： Short

Limit switch [1]
N： Without limit switch
A： 2 x normally closed, 100 mm cable, connector
B： 2 x normally open, 100 mm cable, connector
C： 2 x normally closed, 4m open cable end
D： 2 x normally open, 5m open cable end

Toothed belt
N：Standard belt

Position measuring system option [2]
N： Without position measuring system
A： HIWIN PM, analog signal, 1 V_{PP} sin/cos
D： HIWIN PM, digital signal, TTL 5 V

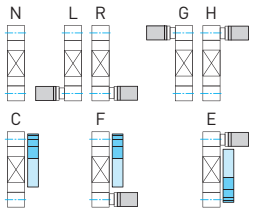

Drive Interface [3] [4]
N：Without
L：Left
R：Right
G：Left rear
H：Right rear
C：None, drag chain on the right
F：Right front, drag chain on the right
E：Right rear, drag chain on the right

Flange type [5]

Gearbox [6]

Note:
1. Further reference switches can be provided upon request.
2. When selecting the optional position measuring system, the positioning repeatability is ±0.005 mm. For more details, please contact HIWIN.
3. If no flange installation direction is selected, the specification code ends here.
4. For flange installation direction and drag chain dimensions, please contact HIWIN.
5. For all flange types, please consult. If no gearbox is selected, the specification code ends here.
6. For suitable gearbox, please contact HIWIN.

KHT100B Dimensions

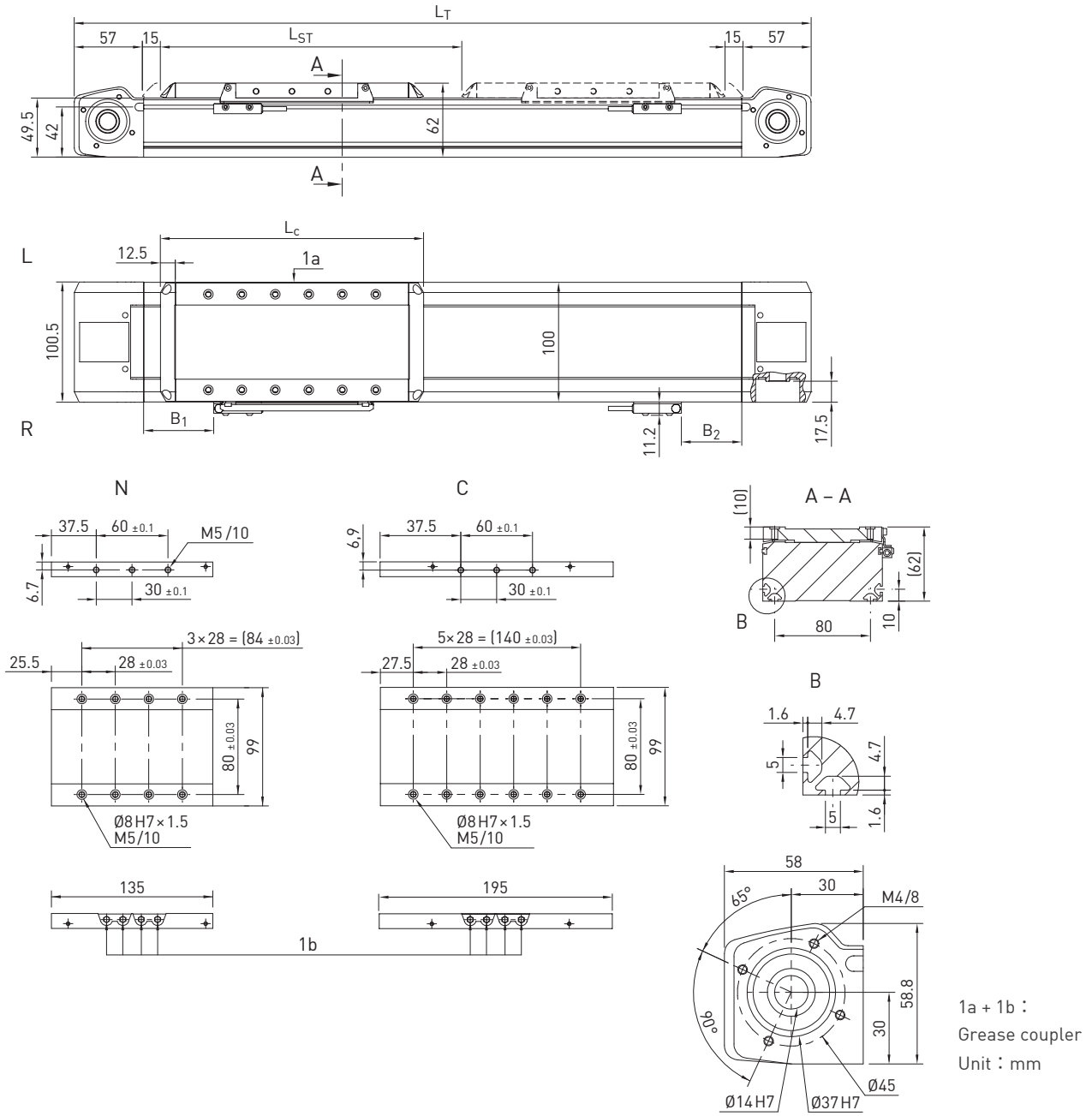

1a + 1b：
Grease coupler
Unit：mm

Item \ Type of carriage	Without cover	With cover
Carriage length Lc (mm)	160	220
Limit switch position B_1 (mm)	28.5	58.5
Limit switch position B_2 (mm)	20.5	50.5
Max. stroke length L_{ST} (mm)	2,500	2,500
Total length L_T (mm)	$L_T = L_{ST} + 304$	$L_T = L_{ST} + 364$
Rated load (kg)	40	40
Max.speed (m/s)	5	5
Repeatability (mm)	±0.04	±0.04
Repeatability when selecting the optional position measuring system (mm)	±0.005	±0.005

KHT150B Dimensions

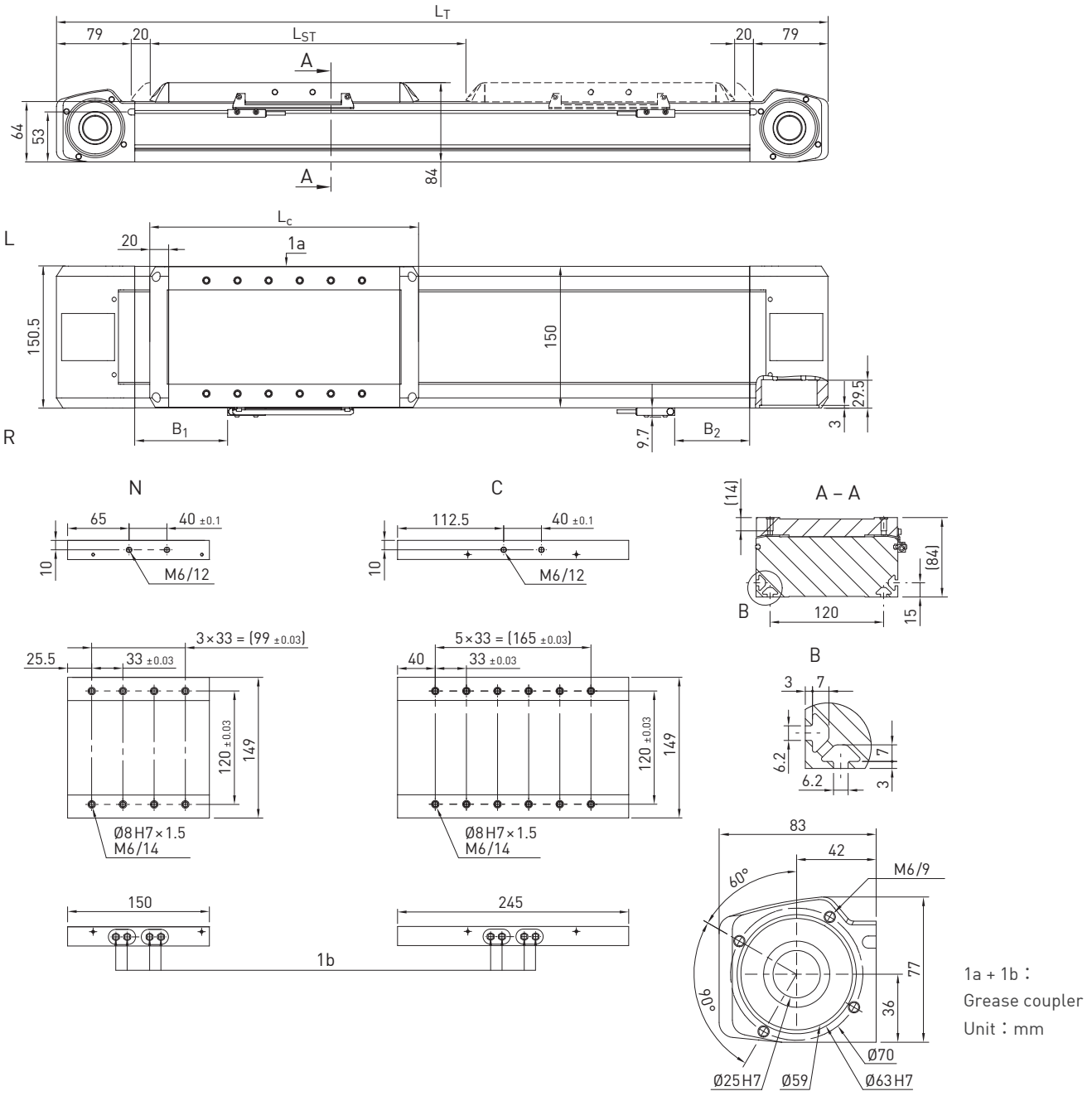

1a + 1b：
Grease coupler
Unit：mm

Item \ Type of carriage	Without cover	With cover
Carriage length Lc (mm)	190	285
Limit switch position B_1 (mm)	51	98.5
Limit switch position B_2 (mm)	32	79.5
Max. stroke length L_{ST} (mm)	2,500	2,500
Total length L_T (mm)	$L_T = L_{ST} + 388$	$L_T = L_{ST} + 483$
Rated load (kg)	80	80
Max.speed (m/s)	5	5
Repeatability (mm)	±0.04	±0.04
Repeatability when selecting the optional position measuring system (mm)	±0.005	±0.005

Global Sales and Customer Service Site

HIWIN GmbH
OFFENBURG, GERMANY
www.hiwin.de
www.hiwin.eu
info@hiwin.de

HIWIN Schweiz GmbH
JONA, SWITZERLAND
www.hiwin.ch
info@hiwin.ch

HIWIN KOREA
SUWON • CHANGWON, KOREA
www.hiwin.kr
info@hiwin.kr

HIWIN USA
CHICAGO, U.S.A.
www.hiwin.com
info@hiwin.com

HIWIN s.r.o.
BRNO, CZECH REPUBLIC
www.hiwin.cz
info@hiwin.cz

HIWIN CHINA
SUZHOU, CHINA
www.hiwin.cn
info@hiwin.cn

HIWIN JAPAN
KOBE • NAGOYA • TOKYO • TOHOKU • NAGANO • SHIZUOKA • HOKURIKU • HIROSHIMA • FUKUOKA • KUMAMOTO, JAPAN
www.hiwin.co.jp
info@hiwin.co.jp

HIWIN FRANCE
STRASBOURG, FRANCE
www.hiwin.fr
info@hiwin.de

HIWIN BULGARIA
SOFIA, BULGARIEN
www.hiwin.bg
info@hiwin.bg

HIWIN Srl
BRUGHERIO, ITALY
www.hiwin.it
info@hiwin.it

HIWIN SINGAPORE
SINGAPORE
www.hiwin.sg
info@hiwin.sg

- HIWIN is a registered trademark of HIWIN Technologies Corp.. For your protection, avoid buying counterfeit products from unknown sources.
- Actual products may differ from specifications and photos provided in this catalog. These differences may be the result of various factors including product improvements.
- HIWIN website for patented product directory: http://www.hiwin.tw/Products/Products_patents.aspx
- HIWIN will not sell or export products or processes restricted under the "Foreign Trade Act" or related regulations. Export of restricted products should be approved by proper authorities in accordance with relevant laws and shall not be used to manufacture or develop nuclear, biochemical, missiles or other weapons.

HIWIN TECHNOLOGIES CORP.
No. 7, Jingke Road,
Taichung Precision Machinery Park,
Taichung 408208, Taiwan
Tel: +886-4-23594510
Fax: +886-4-23594420
www.hiwin.tw
www.hiwinsupport.com
business@hiwin.tw

The specifications in this catalog are subject to change without notification.

Copyright © HIWIN Technologies Corp.

©2025 FORM K11DE01-2504 (PRINTED IN TAIWAN)