HIWIN®

Cartesian Robot-KK Series



HIWIN®



Outline

1. Product Outline
2. Product Description
3. Application Cases

Product Outline(1/6)



K09DC02-2408



Product Outline(2/6)

Rail Base	Steel U-rail (KK)	Aluminum U-rail (KC)	Aluminum Base(KH)
Accuracy	Precision (repeatability, running parallelism)	Standard (repeatability)	Standard (repeatability) - Precision (repeatability)- Magnetic scale closed-loop
Load	Heavy load	Light/medium load	Single unit - Light/medium load KHD dual-axis - High torque resistance
Rigidity	Excellent (steel structure)	Standard (aluminum alloy base)	Excellent (aluminum alloy base)
Load Capacity	High	Light/Medium	Medium
Length	Standard (Effective stroke 1.1M)		Long (Effective stroke ~3.5M)
Affect of Mounting Torque	Tolerant	Sensitive	Tolerant

Product Outline(3/6)

Customer Feedback (Pain Points): Labor shortage has led to a lack of skilled personnel with design capabilities and insufficient assembly capacity. As a result, the trend is shifting towards purchasing fully assembled, ready-to-use products.



Product Outline(4/6)





HCR4 Controller



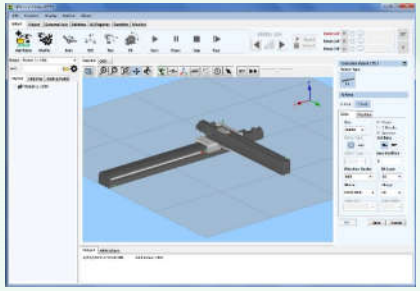

HRSim Simulation (Offline)
HCROS Operation Interface (Online)



DCRK-KK Series

Layer	Abbreviation	Full Name	HIWIN Robot System Components
Software	HRSim	HIWIN Robot Simulation	Offline-Simulation Software
	HCROS	HIWIN Cartesian Robot Operation System	UI-On-Machine Operation Interface
Hardware	HCR4	HIWIN Cartesian Robot 4axis controller	Controller-4 axis Controller
	DCRK	Design Cartesian Robot KK series	Machine- Cartesian Mechanism (KK Series)

Product Outline(5/6)

Enhance the protective capability of the cover

- **HIWIN G03 Grease of Low Particle-emitting (High Speed)**

Features:

1. Low particle emitting rate and suitable for clean room environment
2. Wear resistant
3. For long term usage and wear resistance under high speed condition

Basic Properties:

Color		Beige
Base Oil		Synthetic hydrocarbon oil
Consistency Enhancer		Special calcium soap
Service Temperature (℃)		-45~125
NLGI-grade (0.1mm)		265-295
Viscosity (cst)	40℃	30
	100℃	5.9
Drop Point(℃)		> 210



Standard Aluminum Cover
Class10000(In-house testing)

Protective Capability ↑

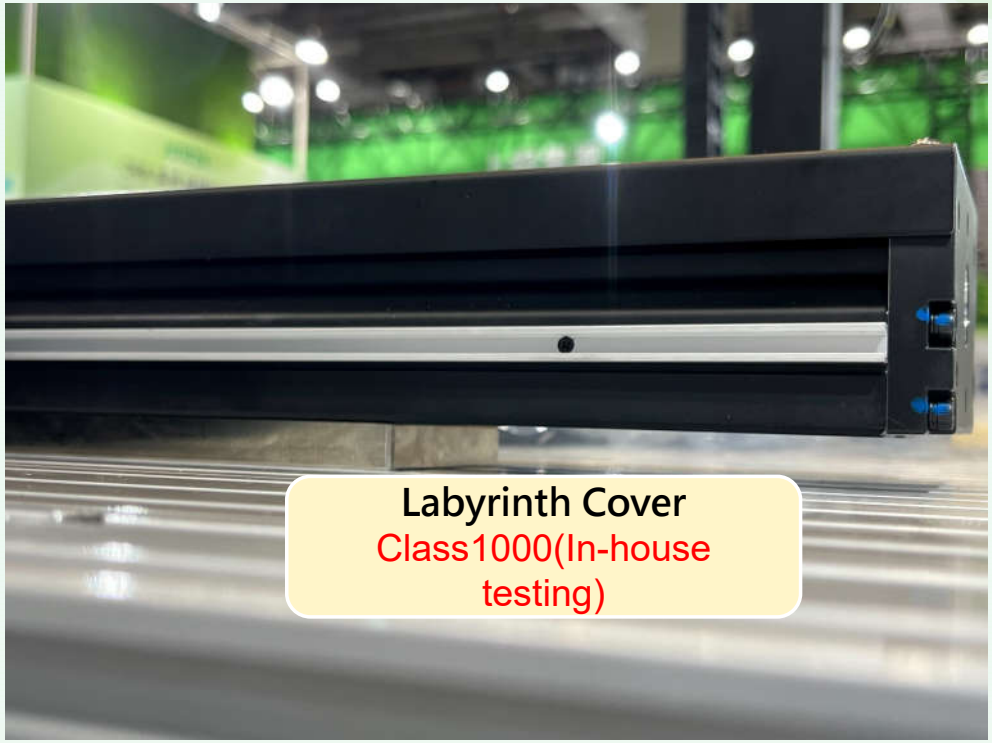

Labyrinth Cover
Class1000(In-house testing)

Labyrinth Cover (Sheet Metal)

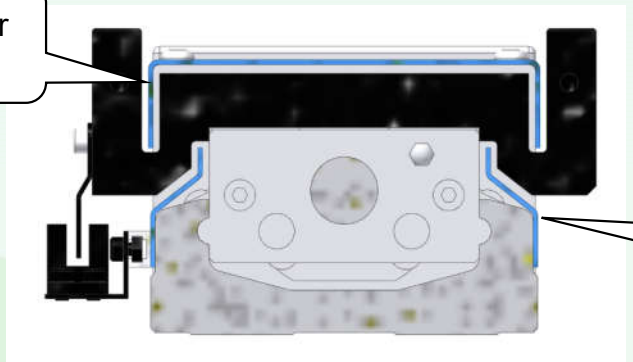

Labyrinth Cover (Sheet Metal)

Reduces the risk of foreign object intrusion

Product Outline(6/6)

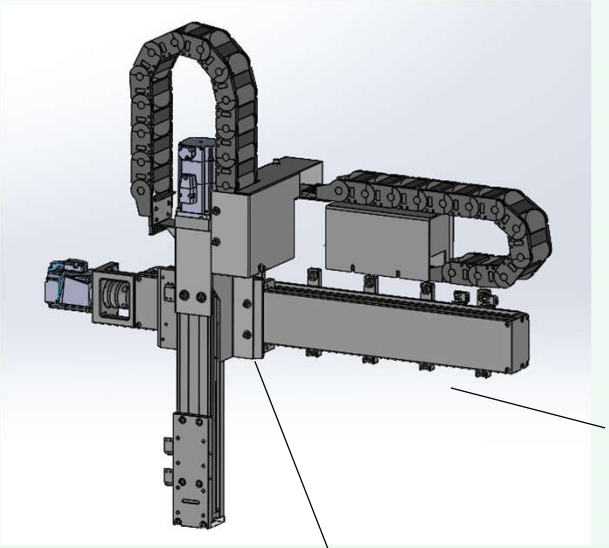

Mounting Method for Adapter Plate and KK Single Axis:

The adapter plate is aligned against the reference surface and securely fastened with torque-applied screws for stability.



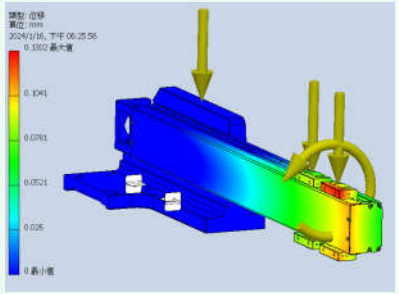

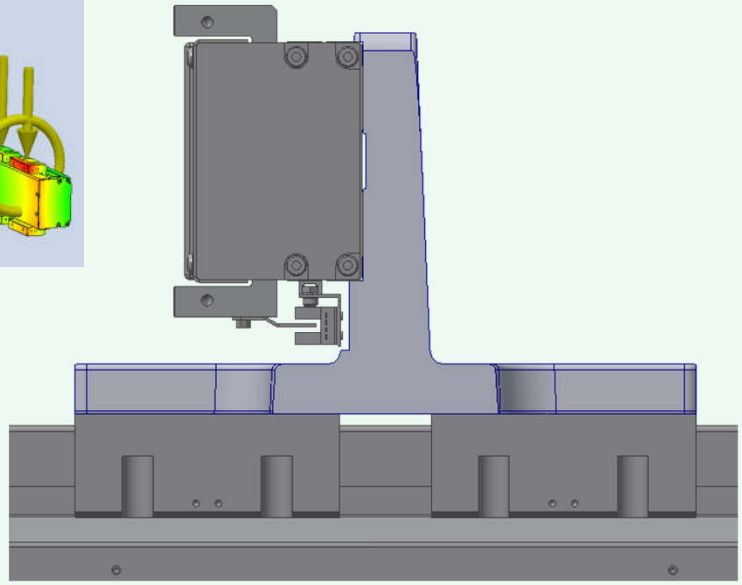





Product Description (1/14)

Nomenclature (Select Type First, Then Specification):

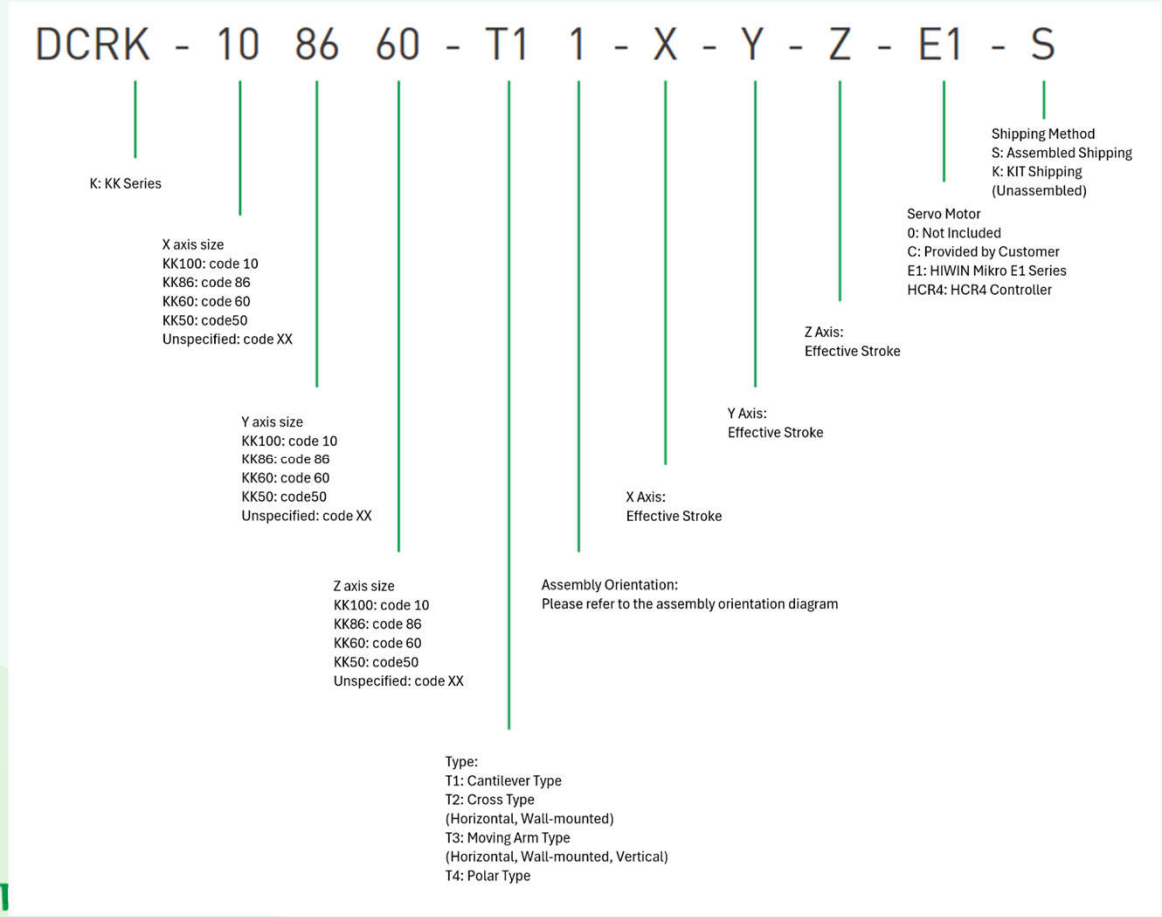

Code	Name	Number of Axes / Axis Type	Style - Illustration
T1	懸臂型 (Cantilever Type)	2 / XY	
T2	十字型 (Cross Type)	2 / (Horizontal XY / Wall-mounted YZ)	
T3	動臂型 (Moving Arm Type)	2 / (Horizontal XY / Wall-mounted YZ / Vertical ZY)	
T4	極座標型 (Polar Type)	2 / XZ	
T5	龍門型 (Gantry Type)	2 / XY	
T6	懸臂型 (Cantilever Type)	3 / XYZ	
T7	龍門型 (Gantry Type)	3 / XYZ	
T8	極座標型 (Polar Type)	3 / XZY	

Product Description (2/14)

Example:
SPEC: DCRK-86XX60-T42-300-0-300-E1-S

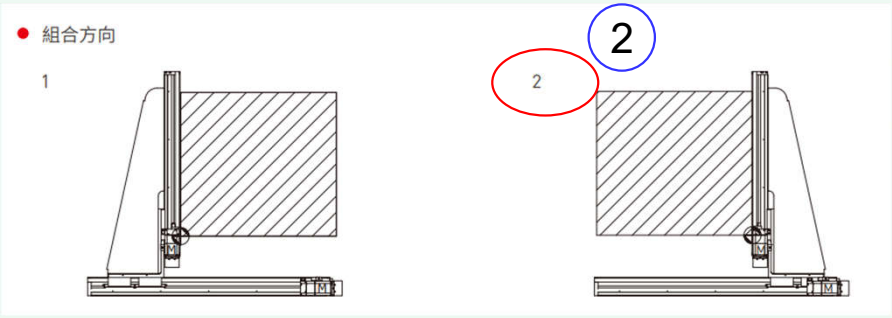

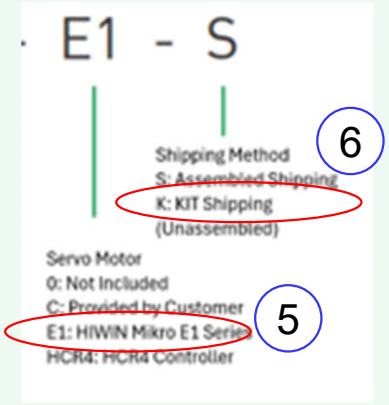

Select Type First, Then Specification

1 DCRK-86XX60-T4 Polar tpye

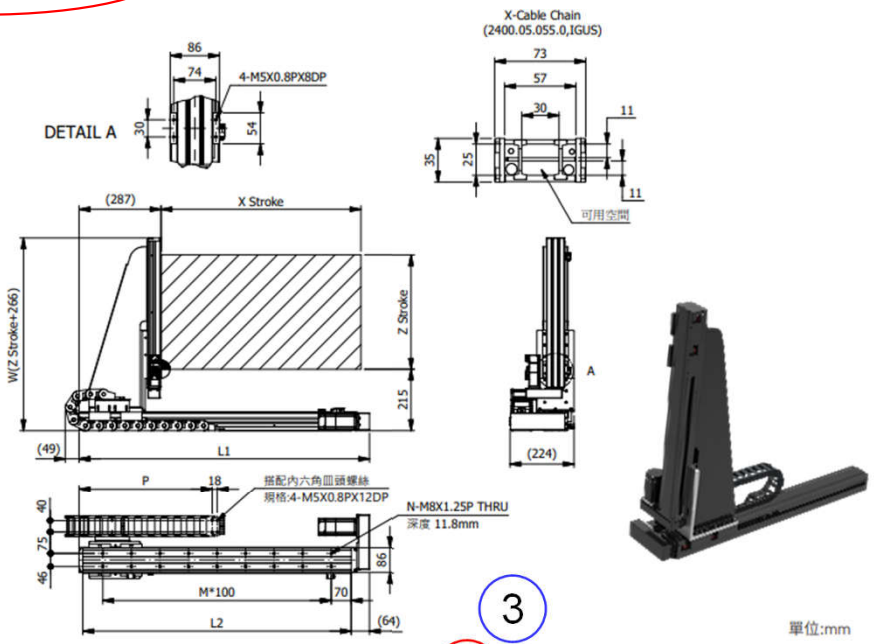

3

單位:mm

	X 軸	Z 軸
Series	KK86D	KK60D
Repeatability(mm)	±0.005	±0.005
Ballscrew Dia.(mm)	15	12
Ballscrew Lead(mm)	20	10
Max. Speed(mm/s)*1	1000	500
Stroke(mm)	200~1000	100~600
Motor Power(W)	200	100含剎車
Operating Environment	0°C~50°C, Humidity35~80% (Non-	

X axis stroke	200	300	400	500	600	700	800	900	1000
L1	517	617	717	817	917	1017	1117	1217	1317
L2	440	540	640	740	840	940	1040	1140	1240
M	3	4	5	6	7	8	9	10	11
N	8	10	12	14	16	18	20	22	24
P	268	268	318	368		468	518	568	618
Max. Speed(mm/s)	1000					679	571	475	402

4

Z axis stroke	100	200	300	400	500	600
W	366	466	566	666	766	866
Max. Speed(mm/s)	500					436
Max. Load(kg)	10					

*1：最高速度 (mm/s) 是以馬達最高轉速 3000rpm為基準。

Product Description (3/14)

	Package	Contents	Included Items	Target Customers
1	Cartesian Robot (Mechanical Unit Only)		1. KK Single-Axis Robot 2. Mounting Accessories	System Integrators / customers with automation capability (motor brand pre-specified or limited)
2	Cartesian Robot (Mechanical + Servo Motor Set)		1. KK Single-Axis Robot 2. Mounting Accessories 3. E1 Servo Motor, E2 Driver, and Cables	System Integrators / automation customers with in-house controller/UI design
3	Cartesian Robot (Mechanical + Controller + Software: HRsim、HCROS)		1. KK Single-Axis Robot 2. Mounting Accessories 3. E1 Servo Motor & Driver Set 4. HCR4 Controller and Cables	System Integrators, automation customers, end users

Product Description (4/14)

Dial Gauge Precision Measurement



2024 TMTS (Exhibited T1~T4 Configurations)



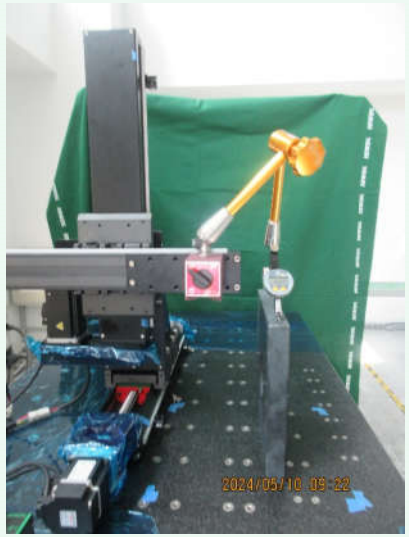



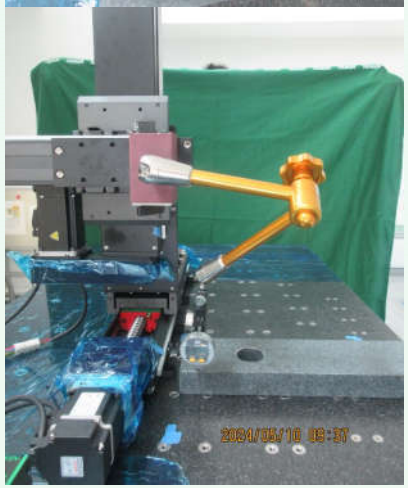



Load testing

HIWIN.

Product Description (5/14)

Load, Deflection, and Life Expectancy of Single Axis (Guideway, Ballscrew, Bearing

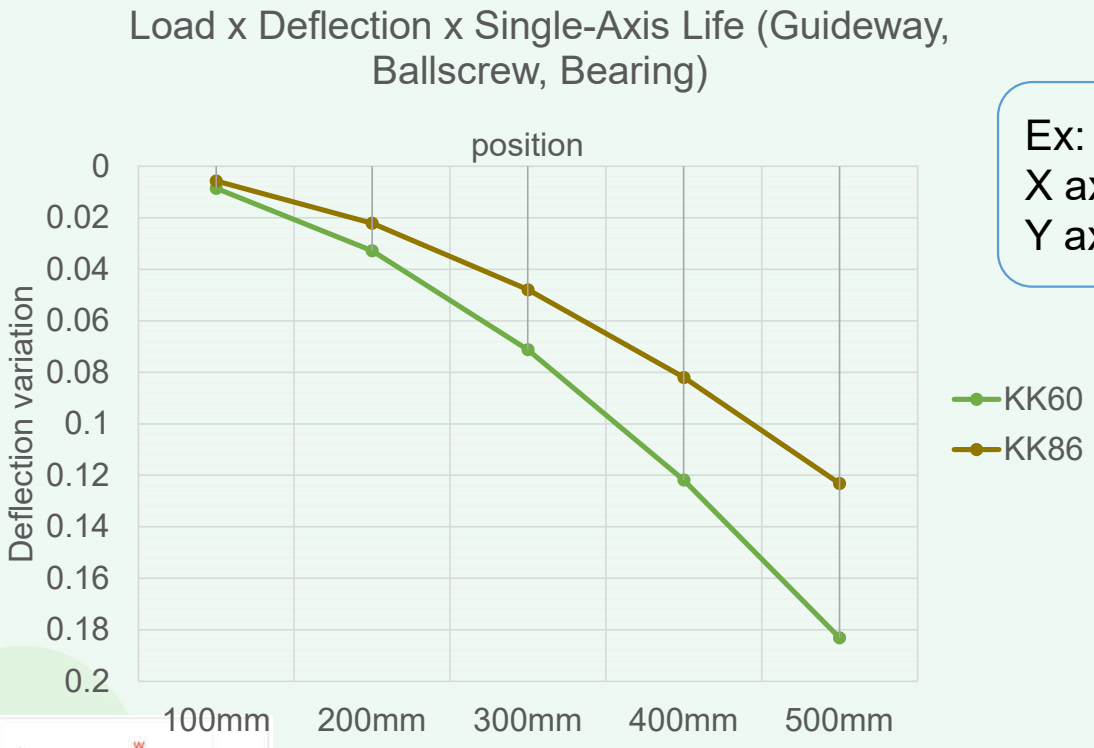

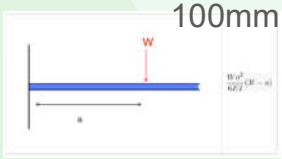

Guideway Deflection Description (Graph-based)
1、KK60 supports a 10 kg load; KK86 supports a 15 kg load.
2、Deflection variation under different lengths and load conditions.

Ex: T1 Cantilever Type
X axis: KK86
Y axis: KK60

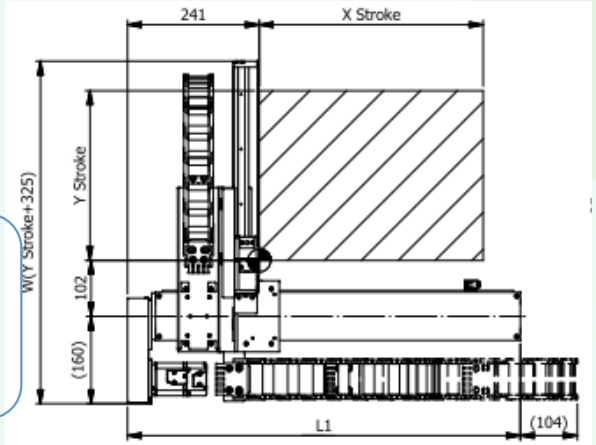

X軸有效行程	100	200	300	400	500	600	700	800	900	1000
L1	417	517	617	717	817	917	1017	1117	1217	1317
L2	340	440	540	640	740	840	940	1040	1140	1240
M	2	3	4	5	6	7	8	9	10	11
N	6	8	10	12	14	16	18	20	22	24
P	214	264	264	314	364	414	464	514	564	614
最高使用速度(mm/s)	1000					875	699	571	475	402

Y軸有效行程	100	200	300	400	500
W	425	525	625	725	825
最高使用速度(mm/s)	500				
Y軸最大荷重(kg)	25	25	20	15	10

*Ensure deflection remains within 0.5 mm under various positions and loads.
*Perpendicularity between X and Y axes: 90° ± 0.015° over 1 meter of travel.

HIWIN

Product Description (6/14)

HCR4：HIWIN Cartesian Robot 4axis controller (Programmable Motion Controller)

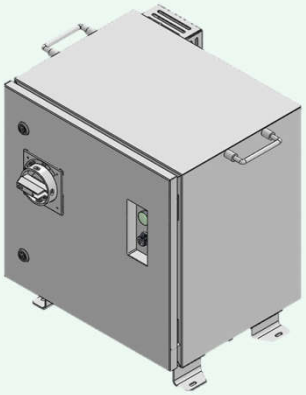

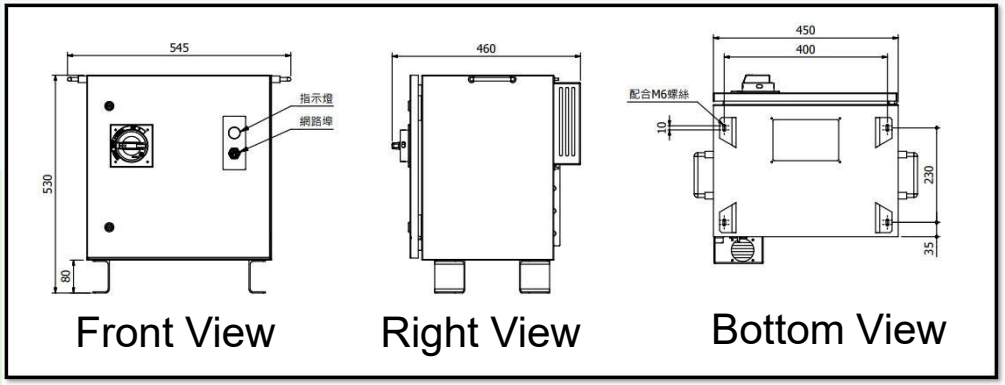

Model			HCR4
Basic Specification	Compatible Models		Cartesian Robots
	Enclosure Dimensions		(W)554mm x (H)530mm x (D)355mm
	Enclosure Weight		26kg
	AC Power Supply	Input Voltage Range	Single-phase AC 200 ~ 240 Vrms
		Power Frequency	50 ~ 60 Hz
Axis Control	Number of Controlled Axis		4 Axis
	Supported Drives		Servo Drive (Pulse Command) Stepper Drive (Pulse Command)
	Maximum Output Bandwidth		Differential: 5Mpps
	Signal Format		CW/CCW ， AB phase ， Pulse/DIR
	Control Modes		PTP (Point-to-Point) 4-Axis Linear & Circular Interpolation
	Motion Acceleration/Deceleration		Trapezoidal, S-Curve
	Position Display Unit		mm
Programming	Programming Language		HRSS
	Memory Capacity	Teaching Points	5000
		Program Lines	10000
Emergency Stop	SAFETY	Input	Dual Loop
Device Handshaking	Communication		Modbus RTU： 1CH
	Signal I/O	Function Input/Output	Input: 8 / Output: 8
		Digital Input/Output	Input: 8 / Output: 8
Operating Environment	Operating Temperature		0 to 45°C
	Storage Temperature		0 to 55°C
	Operating Humidity		20 to 75% RH (Non-condensing)
	Protection Rating		IP65

Product Description(7/14)

Controller Temperature Test

(Reference: Factory with metal roof in Summer – Ambient Equipment Temperature)

Result : PASSED

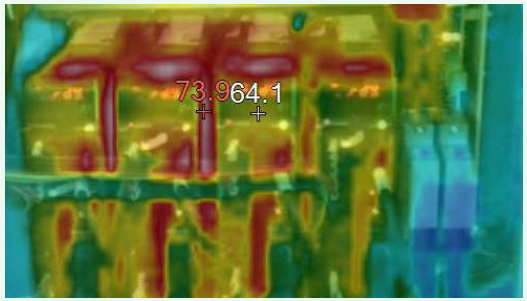

Ambient Temp: 50°C
Operation Time: 3hrs(With Load)
Driver Temp: 74~75°C

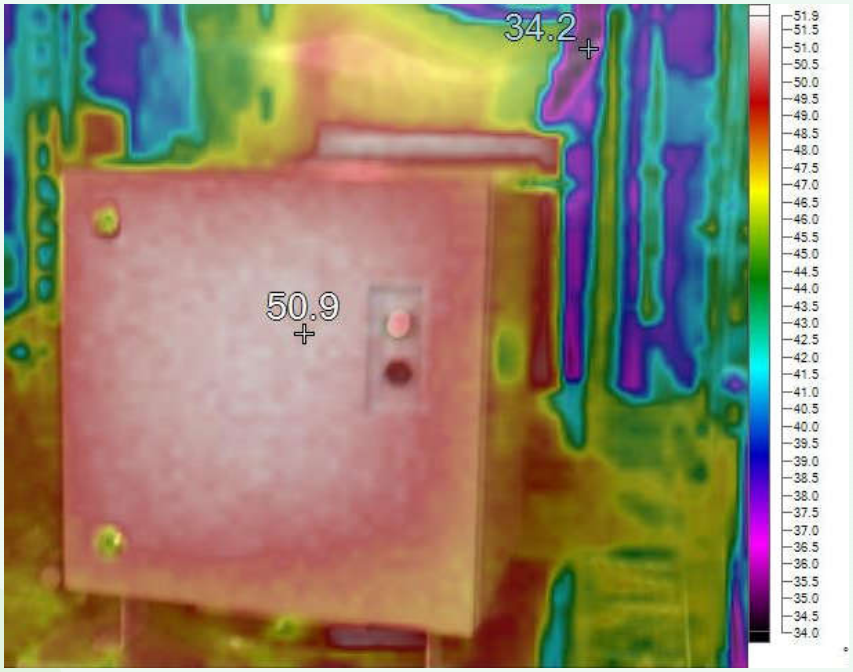

Ambient Temp: 45°C
Operation Time: 3hrs(With Load)
Enclosure Temp: 51~52°C

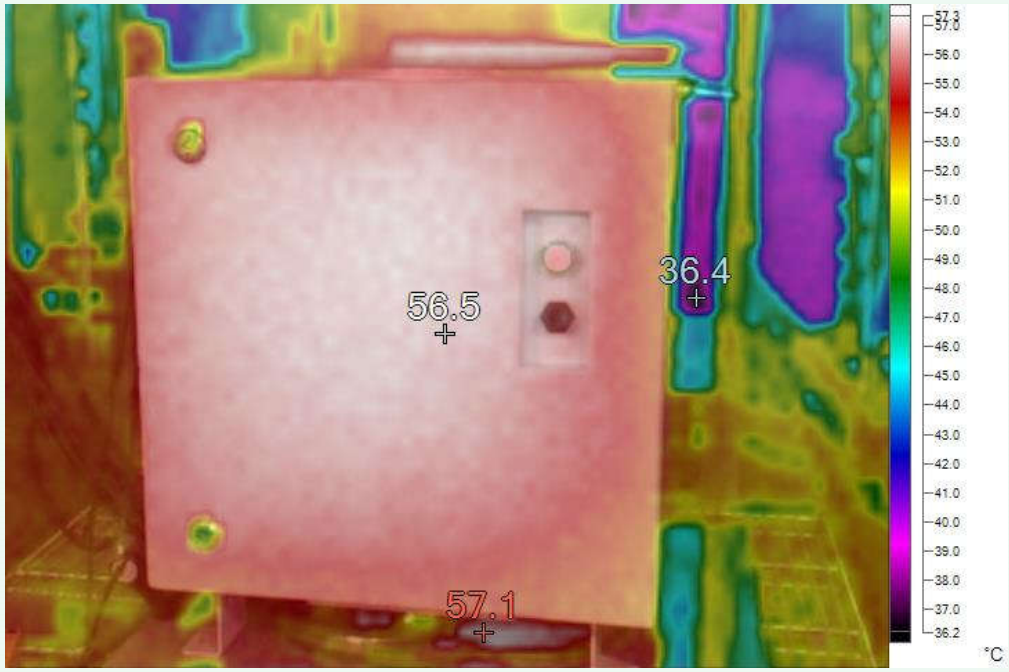

Ambient Temp: 50°C
Operation Time: 3hrs(With Load)
Enclosure Temp: 56~57°C

Product Description (8/14)

Regenerative Resistor Test for Z-Axis

1. T2
   Load 30kg
   Z Axis Motor 400W, stroke 600mm
   Total Weight of Moving Components in Z-Axis = **31.2kg**

	Drive	E1-AC Rotary Motor	Ball Screw - Lead – Rail Length	Effective Stroke	Load Weight	Maximum Linear Speed	Acceleration/ Deceleration Time
Z Axis	E2-003	400W	KK86-10-740	600mm	31.2kg	500mm/s	100ms

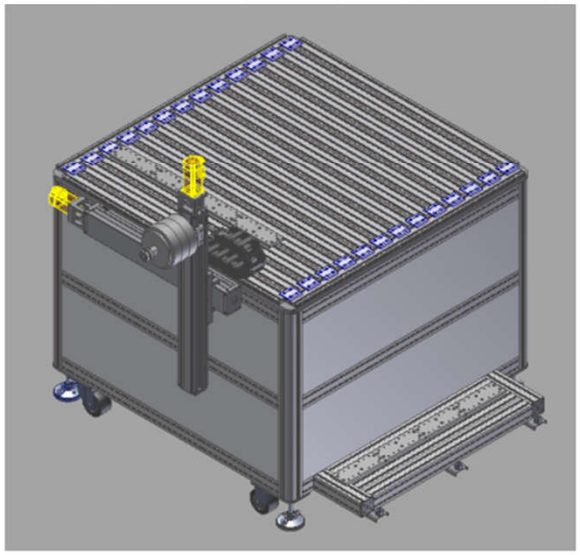



Code	Required Regenerative Energy Consumption & Resistance Values	External Regenerative Resistor Specifications
T2	Resistance >40 Ohm Allowable Power >137.12 W	120Ohm, 300W
T3 Wall-Mounted	Resistance >40 Ohm Allowable Power >151.06 W	
T3 Vertical	Resistance >40 Ohm Allowable Power >57.62 W	50Ohm, 100W
T4	Resistance >40 Ohm Allowable Power >34.21 W	

Product Description (9/14)

System Structure

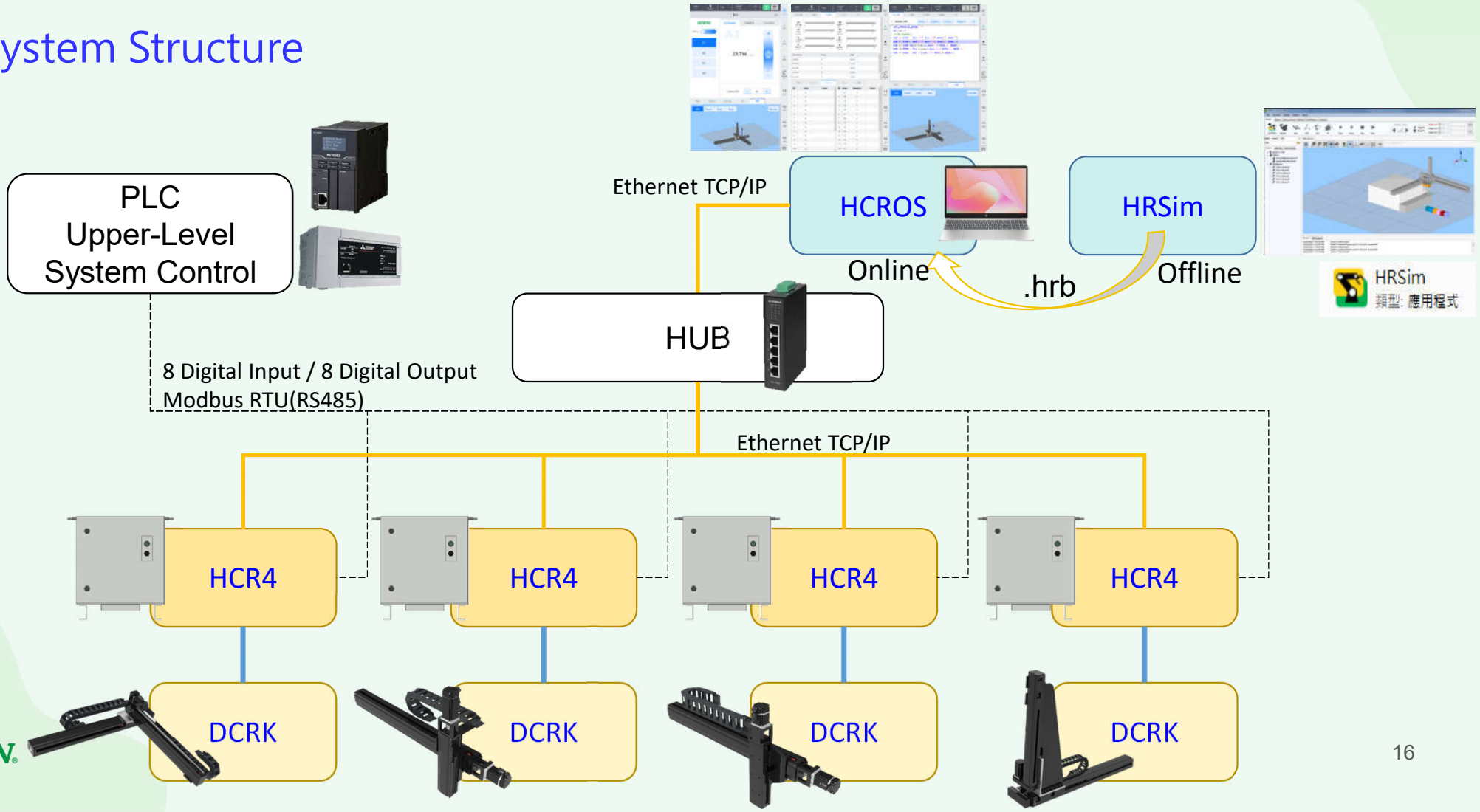

Product Description (10/14)

HCROS Operating Software

HCROS



Laptop

(windows7、10)

HCROS



Tablet

(windows7、10)

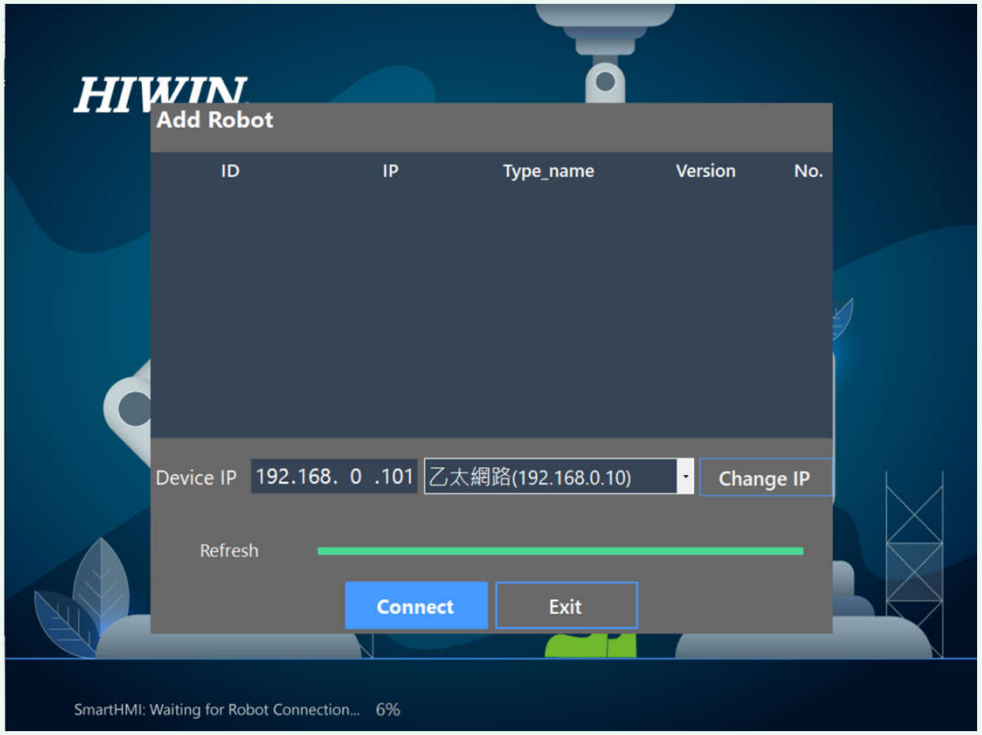

HCROS Connection Interface

Product Description (11/14)

HRSim HIWIN Robot Simulation Software(1/3)

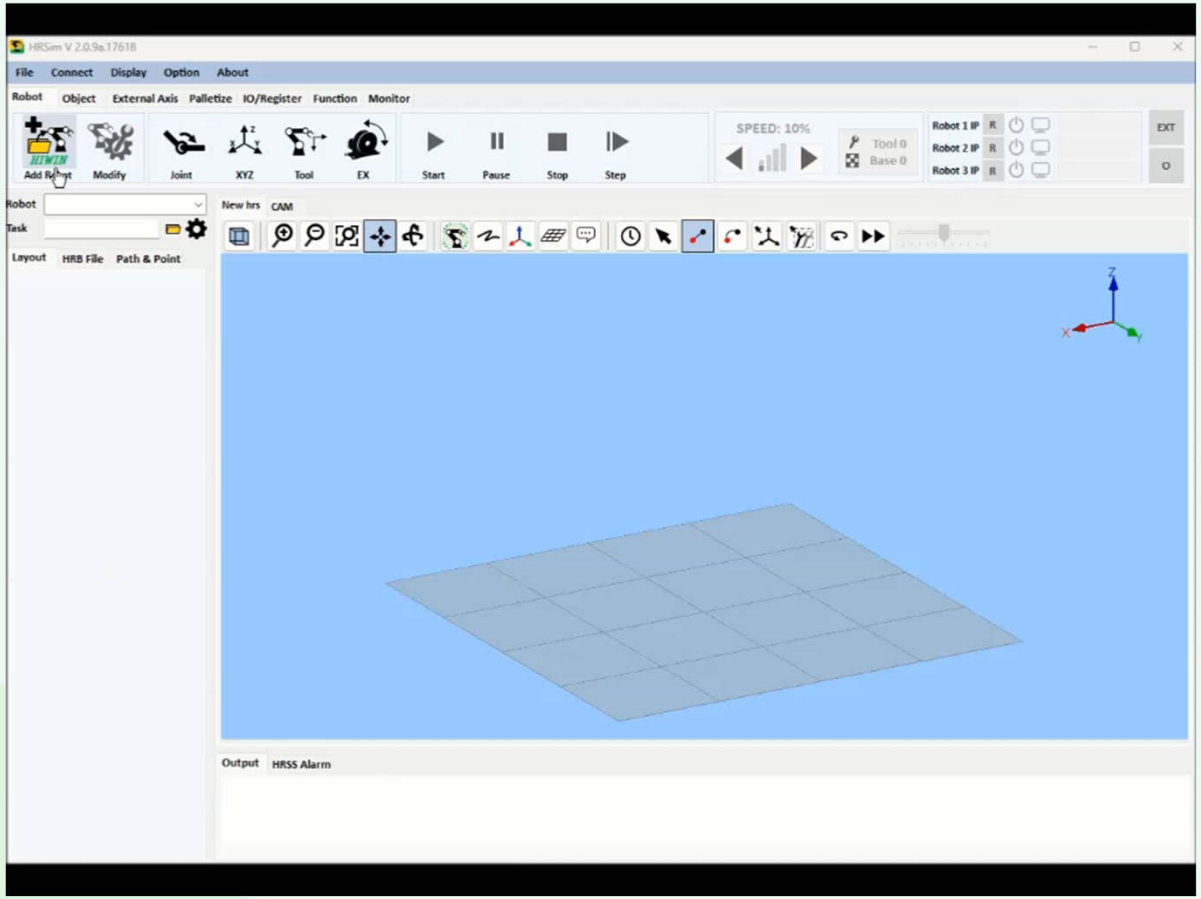

Built-in Standard Joint Configurations

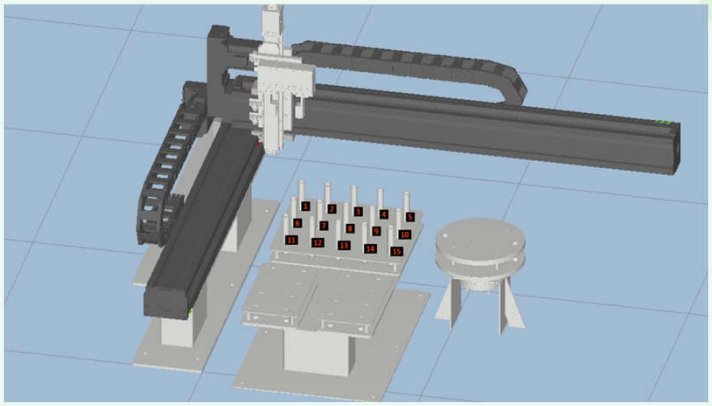

Test Tube Tray Transfer Application Example

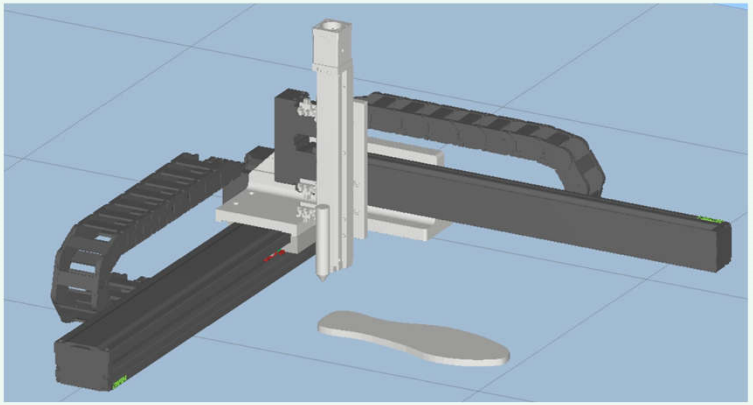

Glue Dispensing Path Application Example

Product Description (12/14)

HRSim HIWIN Robot Simulation Software(2/3)

IAI Example：

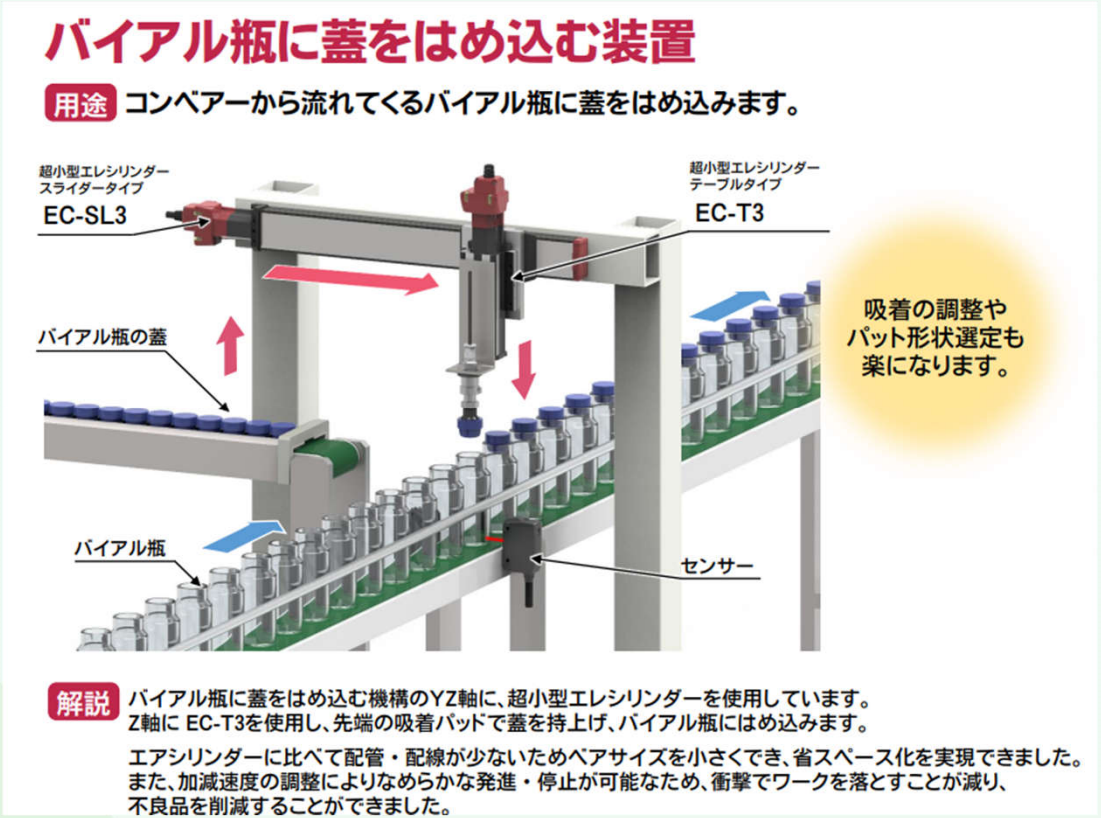

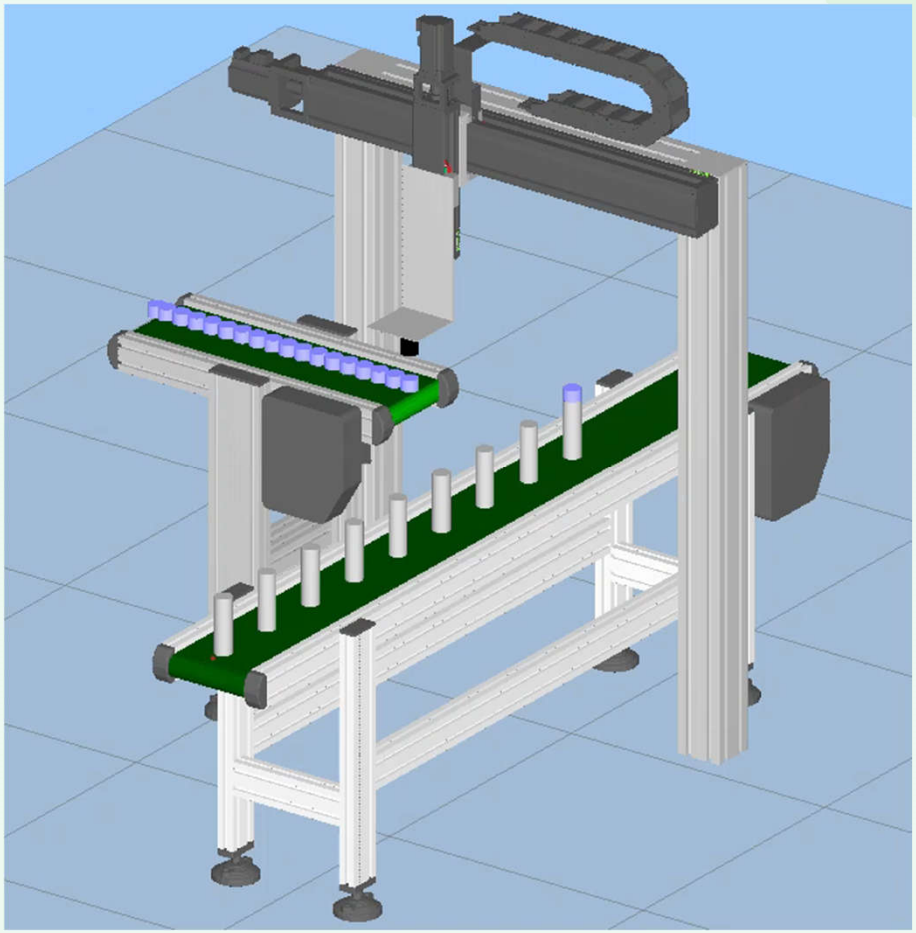

HRSim Simulation – TYPE 2 Case

Product Description (13/14)

HRSim HIWIN Robot Simulation Software(3/3)

IAI Example：

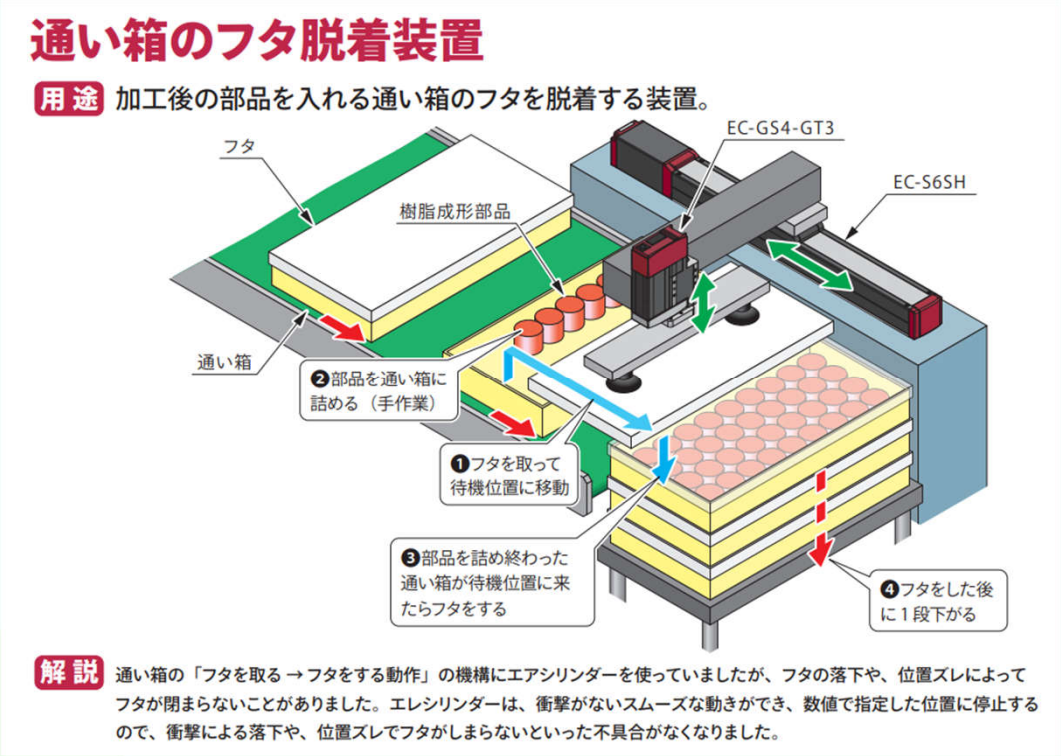

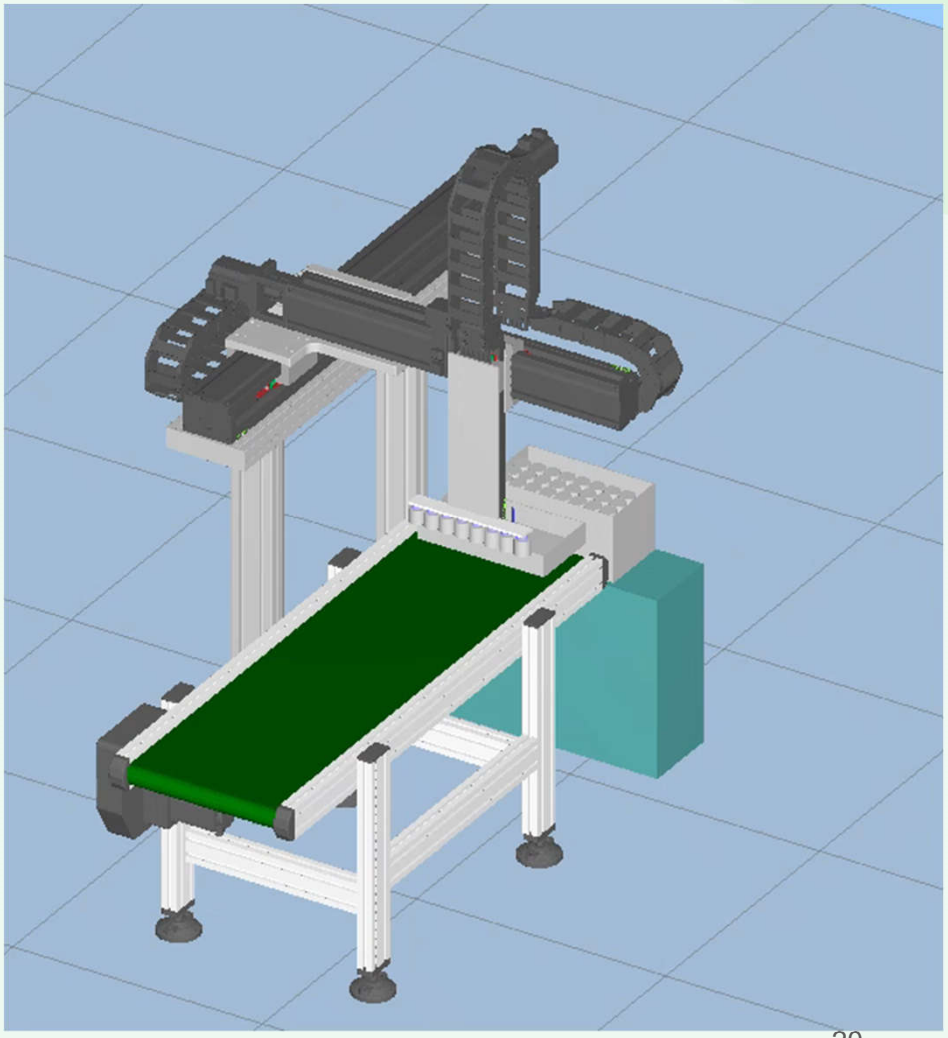

HRSim Simulation – TYPE 6 Case

Product Description (14/14)

Live Demonstration



S-Shape Path、Spiral Path

Application Examples (1/3)



Semiconductor & Electronics



Automotive Parts Manufacturing



General Industrial Machinery



Medical & Biotechnology

- **Cartesian Robot** Versatile Applications for General Automation Equipment

Screw Fastening | Dispensing | Loading & Unloading | Assembly | Welding | Packaging | Cutting

Application Examples (Customer) (2/3)



Diving Snorkel

Application: Injection molding machine – Material Removal

Product Manufactured: Diving Snorkel

Special Requirements:

1. Semi-collaborative teaching required, allowing manual positioning of the end-effector and recording real-time position points.
2. During material removal, positive air pressure is injected into the snorkel to assist in demolding. At this stage, a counteracting air pressure force of approximately 40kgf is applied, and the mechanical structure must withstand this force.



Spec	DCRK-XX1086-T11-680-640-0-E1-S

Application Examples (Customer) (3/3)



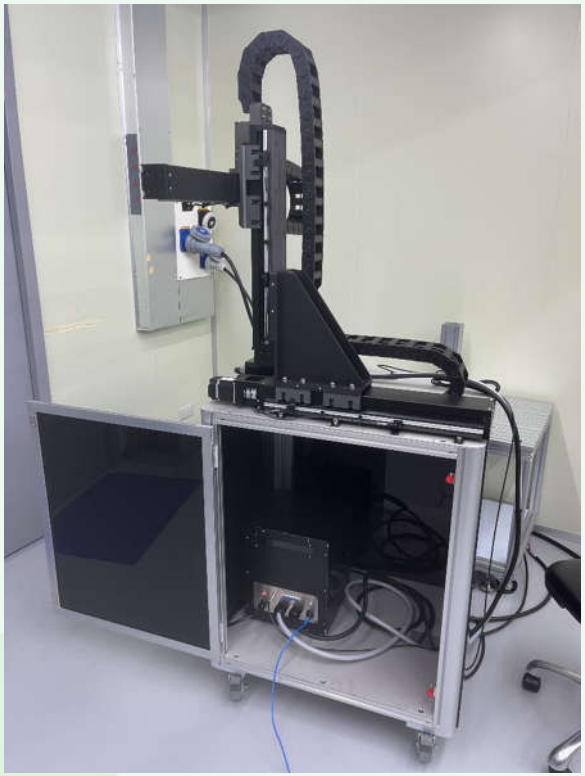

Customer Use Case Description:

A Cartesian robot, equipped with an end-effector laser module, can perform various operations such as:

- Sheet Cutting
- Metal Welding
- Remote Welding
- Power Battery Welding
- Drilling
- Cladding
- Heat Treatment
- Ablation
- Sintering

Drawing the path using a pen (with no significant deviation)

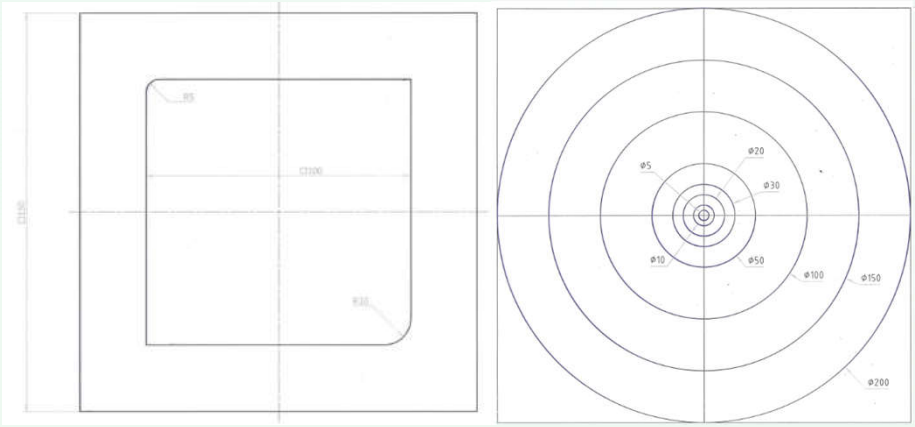

Spec	DCRK-108660-T81-250-250-250-E1-S

HIWIN

HIWIN®

Thank you for your attention!
We appreciate your feedback.

